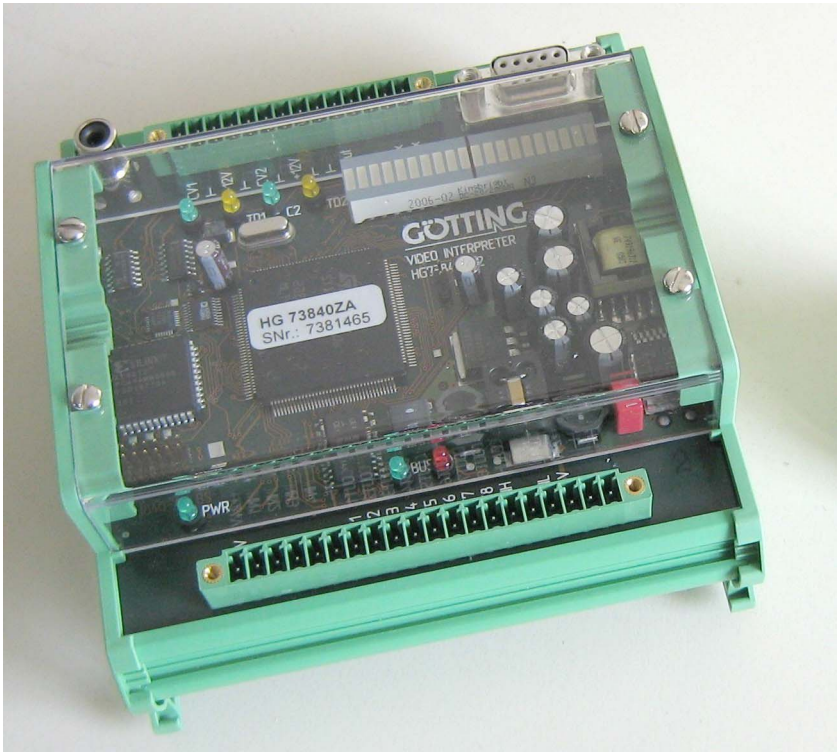

Optical Line Tracker

– Interpreter for 2 Cameras –
CANopen® – serial – parallel port

HG G-73840ZC

English, Revision 09	Dev. by: W.M.
Date: 02.11.2016	Author(s): RAD / MN / LS / SM

Götting KG, Celler Str. 5, D-31275 Lehrte - Röddensen (Germany), Tel.: +49 (0) 51 36 / 80 96 -0,
Fax: +49 (0) 51 36 / 80 96 -80, eMail: techdoc@goetting.de, Internet: www.goetting.de

GÖTTING

Content

1 Introduction

1.1 Tracker

This document describes the Optical Line Tracker (interpreting unit) HG 73840ZA which is part of an Optical Guidance System for Automated Guided Vehicles (AGV) enabling travelling along a contrast line on the ground. The Optical Line Tracker interprets the location of this line within the view of the camera and outputs its position with regards to the center of the produced picture. In addition, it is possible to detect branchings from the original course. The Optical Line Tracker is made for the connection of two (2) PAL standard video cameras with composite video signal, in order to automatically guide a vehicle in two different directions of travel (forwards and backwards). It includes a video multiplex unit. It is possible to connect a video monitor in order to control the detected track/line. The detected track is indicated on the display. In addition, an LED line indicates the location of the guidance line.

NOTE! An optical track guidance is only suited for an application in which a minimum level of cleanliness is guaranteed.

The firmware described in this documentation includes the decoding of a 2-digit 2/5 interleaved barcode. Decimal encoding can range from 0 to 99, a code analysis will not be carried out. The barcode provides a high-density information. Thus it is possible to limit the barcode width nearly to the track width (s. Figure 1 on page 6).

The Optical Line Tracker is located inside a top hat rail casing. For the interpreter suitable Götting cameras HG 73841ZA inside an M30 industrial casing with M12 connector are available. The data output is generated via:

- CAN-bus. A CANopen® protocol (Device Profile DS 401) has been implemented.
- Serial interface with adjustable transferable parameters.
- PLC interface with parallel inputs / outputs as well as an analog 'track offset' signal with a max. range of ±10 V is available. Offset and amplitude of this voltage are adjustable.

The power supply of the cameras is generated via the built-in DC/DC converter. Output voltage for the camera supply is 12 V.

The parameters of the Optical Line Tracker are either set via a serial interface using a commonly available terminal program (e.g. Hyperterm) or via the various SDOs of the CAN open protocol. This description is valid for hardware version 73840ZA4 and software version 73840A3 2.01.

1.2 Track Detection

The video signal is read with a resolution of 500 pixel per line. It is possible to select the interpretation line between the lines 30 and 255, as only these lines offer interpretable picture content. Up to 15 consecutive lines can be combined. The update rate for each half-picture is 20 ms.

For the detection of the track, a static procedure that compares the relevant selected lines of the camera picture with a model track of predefined width, is used. The degree of compliance is important. The higher the degree of compliance with regards to the width and contrast of the line, the higher the so-called covariance value. If the covariance value exceeds a threshold determined during the commissioning of the system, the track becomes valid and the location of the covariance maximum is converted into a deviation value.

In case there are two maxima while straight driving is chosen the location of the stronger maximum is used for the calculation of the track deviation. If there are two or more maximas and branching is planned, the locations of the two highest maxima are used. For the calculation of the deviation, depending on the indicated branching mode, the right or left maxima are used accordingly.

For each of the two connectable cameras two different sets of parameters can be used.

NOTE! For each optical image processing a constant lighting for good results is required. Because of this, environmental light and its reflection on the ground have to be shielded from the camera. A shining/reflective dark track or background are also not good for the camera for track detection.

1.3 Barcode

The following picture shows the recording of a track with an additional barcode. The record was taken with a Frame Grabber, which was connected to the monitor exit of the line tracker.

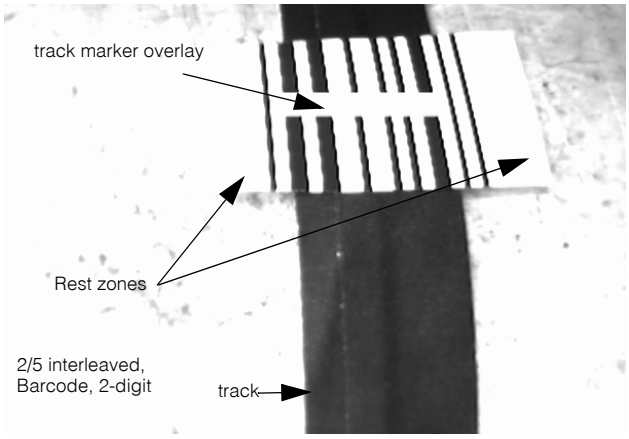

Figure 1 Track with barcode

The code is read form the first and last line of the track marker, then it is decoded and compared. If the codes match, it will be checked whether the minimal symbol contrast exceeds the set threshold SCmin or not.

If those conditions are fulfilled, the code is transferred in the TPDO of the CANopen® protocol. Furthermore the bit CODE_OK is set in the system status. If the outputs OUT_1 to OUT_4 are activated for the parallel output of the code, the four lower bits will be out put using those. So only the codes 0 to 15 can be put out using the parallel port.

The output OUT_5 (DATA_READY) is always set for a settable time as soon as a code is decoded, it does not matter if the parallel output is activated or not.

A new pulse is only possible after changing a code, to prevent a multiple Data_Ready_Pulse, for example due to dirt etc. on a label.

To let the device read the same label again, for instance after changing the driving direction, the following options are provided:

- CANopen®: a communication reset has to be produced.
- Serial interface: A configuration sequence has to be transmitted.
- Parallel port (PLC mode): the inputs IN_1 and IN_2 have to be set to 0 for a moment (here it has to be taken care of the adjusted debounce time, see picture 13 on page 27).

After that the code which was read previously generates again a Data_Ready pulse and the bite CODE_OK in the status is set again.

1.4 Intended Use

The Optical Line Tracker is designated to be used in vehicles completing intra-logistic transport jobs in industrial areas. The Optical Line Tracker is designed to continuously detect and follow a track on the roadway (black on white / white on black). The track has to be dry and free of dirt (e.g. oil etc.). Branches have to be triggered externally (e.g. Barcode, Transponder, etc.).The Optical Line Tracker is solely intended to detect a track. emergency-stop mechanisms and safety precautions against accidents have to be realized externally.

WARNING! The Optical Line Tracker has not been tested for compliance with the safety requirements according to the SIL levels! Without further external measures it is not permitted to use it for the transport of persons.

NOTE! In case the Optical Line Tracker is used for other purposes than specified above or is modified all warranties against the Götting KG are null and void.

2 Commissioning

2.1 Recommended Tools for Commissioning

Generally all parameters within the Optical Line Tracker can be set via a terminal program or via the CANopen® protocol. Additionally the following tools are useful:

- A frame- resp. video grabber in order to be able to view and save the analog output of the camera signal on a laptop.
- When using the analog output signals a voltmeter is necessary for the exact calibration (s. sections 2.6 on page 11 and 4.4 on page 24).

2.2 Presettings

The CAN baud rate is set to 125Kbaud, the Node ID is preset to 1. The interpreter is preset to a track width of 24 mm (dark track on light background) and a reading distance of 100 mm for the camera HG 73841. The thresholds for signaling deviation are set to ±10 mm and ±15 mm. The parallel interface is deactivated.

The presettings can be altered using either a terminal program (e. g. Hyperterm on your PC) or via the various SDOs of the CANopen® protocol (also refer to chapters 4 on page 21 and 5 on page 40).

2.3 Track Design

A non-reflective black line marking the track on top of a non-reflective white background delivers the best results. Since most roadways are not constantly light it is advisable to lay both the white background and the black line onto the ground. For this the following requirements apply:

- White background: Minimum width of 160 mm, non-reflective
- Dark line: Width of 19 to 30 mm, non reflective, centered on the white background

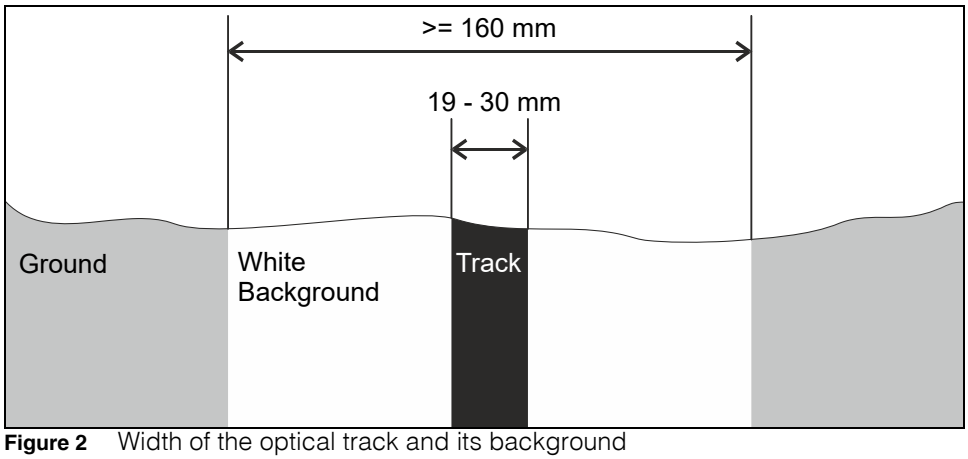

Figure 2 Width of the optical track and its background

Due to the accuracy of the track guidance it is possible that debris from the environment is left at the exact same places. In extreme cases this can lead to the detection of an additional track, which leads to faulty interpretations inside the optical system. A clean environment reduces the risk of this happening. Generally the optical track should be checked for dirt regularly and cleaned if necessary.

Even though we recommend to also lay the white background it may be possible to just lay the dark track directly onto light, clean and non-reflective grounds. The operator of a facility can test and thus find out whether it is possible to do without an artificial background on a given ground.

In existing installations tracks have been implemented the following ways:

- Suitable, non-reflective, resistant paint or varnish in black and white, that are used to paint the track onto the ground.
- Suitable, non-reflective, resistant adhesive tape in black and white with which the background can be affixed to the ground and the track then affixed to the background. Here adhesive tape combining both the background and the track is available. Such tape can e.g. be found using the brand name 1A Tapes (this is no recommendation but is solely mentioned as an example).

2.4 Track Detection

In order to assure a reliable track detection, it is essential that the contrast of the line on the ground compared to its environment is significant. Due to the signal processing respectively the integrated filter, the system is able to bridge a short-time drop out of the track, depending on duration of the drop out and the velocity.

ATTENTION! Shadows and light beams may have significant influence on the performance of the system as the track recognition may be impaired.

It is, for example, possible that a combination of shadows and light beams simulates a virtual guidance that may be followed by the vehicle. Therefore it is recommended to ensure that the guidance line is protected from external light using an appropriate cover (not included in the scope of supply).

Additionally it is important that in the viewing and panning area of the cameras there are no additional contrasts. If e.g. a light track background is placed onto a dark roadway it is possible that the interpreter falsely detects an additional track when the vehicle is initially moved towards the real track.

In order to avoid reflections from reflective or sealed surfaces, the cameras should be mounted with an inclination of 15 to 20° in direction of travel. For most surfaces this leads to a reflection-free detection. It is recommended that you check that there are no reflections via the video output.

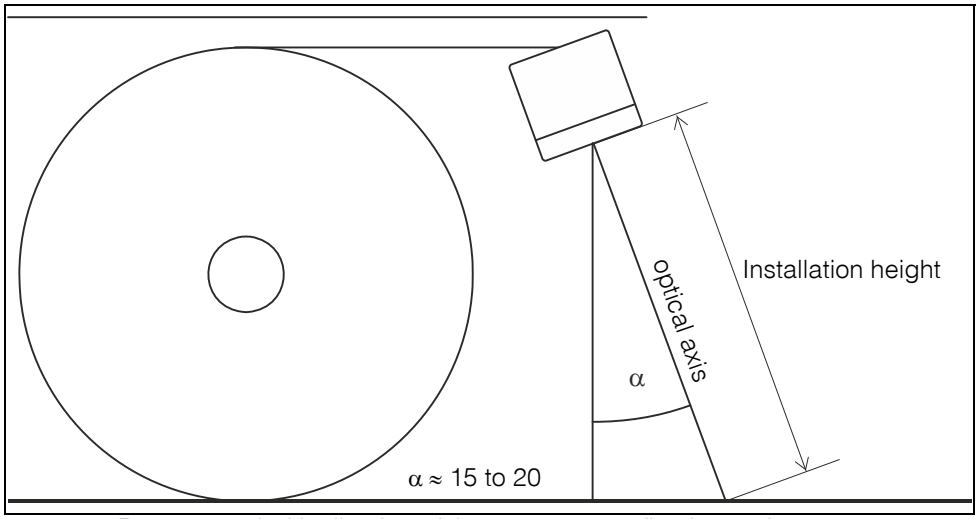

Figure 3 Recommended inclination of the camera on reflective surfaces

The max. width of the guidance line depends on the used camera lens as well as on the installation height of the camera. The width of the guidance line is ideal once its width on the control display is between 1/6 and 1/3 of the overall width of the display. The guidance line may be dark on a light surface or light on a dark surface.

Tip! The integrated lightning of the camera HG 73841 is not sufficient under all conditions. In cases not covered by the integrated lightning additional lightning has to be installed. The integrated lightning can then be disabled (see data sheet HG 73841).

2.5 Branching from the Main Course

In case a vehicle has to leave the main course, the ancillary track has to start as shown in Figure 4. In addition to the main course, only one ancillary track may be within the view of the camera. It is therefore essential to locate the branch-offs on the right and left side with an offset at places where two courses cross.

The command to leave the main course in order to get to one of the ancillary tracks can be given either by the track selection input (serial interface) or via the CAN bus. This command is to be set just before the branch-off gets in sight – and to be reset just after the branch-off has disappeared from sight.

ATTENTION! If at a branch-off the Optical Line Tracker is set to follow a straight track the Optical Line Tracker behaves randomly.

Whenever the Optical Line Tracker is not set to follow a straight track the values for `Peak threshold` and `Warning threshold` are halved in order to ensure a reliable track detection even for drawn-out, slim branch-outs.

For very precise lateral positioning it is important, that the detected track center matches the real track center when driving on straight track segments. On branches the output for track center is calculated by subtracting 50 % of the set track width from the detected track edge. This track calculation characteristic can be used to prevent a deviation in the direction of the track center on branches / threadings.

Tip! For optimal results set both turn off bits (left and right) for straight track segments. Then on branches where the vehicle is supposed to turn off into one direction remove the opposite bit.

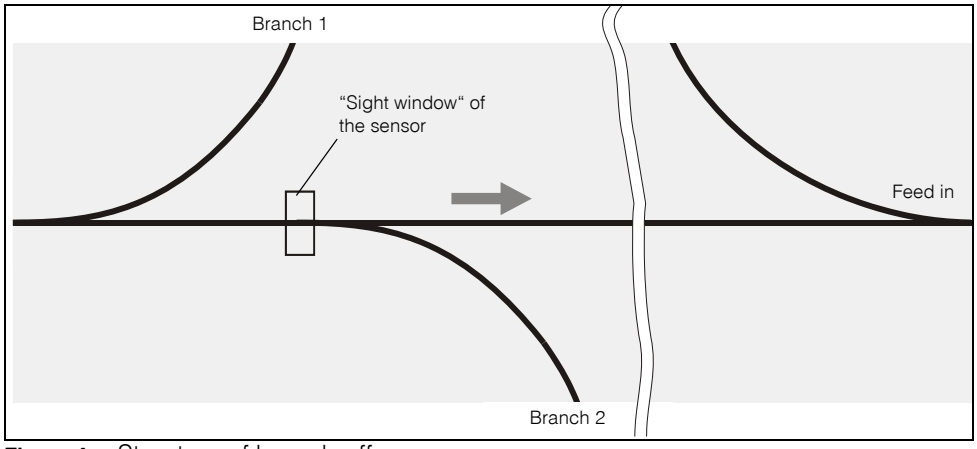

Figure 4 Structure of branch-offs

2.6 Additional Commissioning Steps

Use the built-in parameter menu for setting the parameters (refer to chapter 4 on page 21). Offset and deviation of the analog output voltage are adjustable in steps of 20 mV using the menu `(O)utput-Input Settings`. For the exact setting, it is necessary to check the output voltage with a voltmeter.

Place the camera at the final installation height above a section of the guidance line and set the bits for straight forward travel.

- Enter the reading height and track width in millimeters in the menu Image Settings. In case the camera HG 73841ZB is used, the calibration factor is already factory-set. For other cameras, it is necessary to re-determine the calibration factor within the submenu `Adjust width of track` (refer to Figure 9 on page 25).
- Also select the track structure in this menu: black on white or white on black.

NOTE! Please observe the possibility of the menu Image Settings to store up to 4 parameter sets (see section 4.4 on page 24).

For the ideal setting of the scan lines, a control monitor or a PC with frame grabber card should be connected. Move the marker on the display (parameter `Startline` within menu `Image Settings`, refer to section 4.4 on page 24) to a section of the picture without reflections caused by the lighting of the camera or change the inclination of the camera (refer to Figure 3 on page 10).

Take the peak value for the covariance function from the status line. Set `Peak Threshold` to approx. 80 % of this value for `Peak Threshold` (refer to section 4.4 on page 24). This ensures that there is a tolerance range for changing track qualities. but this should also ensure that the interpreter is not accepting tracks of poor quality which could result in the vehicle inadvertently following damaged tracks. Select the threshold for the guidance line quality warning according to your requirements.

Now, go to the `Luminance Histogram` (4.9 on page 30). The displayed picture should be similar to the one shown in the corresponding chapter. This feature enables inspection of the brightness contrast of the picture. The further away from each other the narrow and high bars are located, the better the contrast.

NOTE! In case the bars become thick and low, leaving no space in between them, the quality of the guidance line is not sufficient. It is necessary to repair the guidance line.

The following setting is only possible when using the PLC interface:

If necessary, adjust the gap filter within the sub-menu `Output-Input Settings` (refer to section 4.5 on page 26). The value of the interruption filter indicates for how many pictures the track may disappear before the output OUT8 (track recognized) is deactivated. This value multiplied by 20 ms indicates the duration of the tolerable gap. This filter is only available for the analog signal in PLC mode (see menu `Output-Input Settings` in section 4.5 on page 26).

Once all settings have been entered, it is necessary to save the new parameters (refer to section 4 on page 21).

Test Run

After setting those values let the vehicle drive automatically along the track. If you do not encounter inadvertent aborts you can use the values permanently. If the vehicle stops check the quality of the track at the stop points and repair the track.

ATTENTION! The track recognition settings of the optical line tracker should only be changed in exceptional cases since lowered values for `Peak Threshold` can lead to unwanted side effects (e.g. vehicle follows falsely recognized track)!

Repeat the test drive after all changes until the vehicle successfully finishes the complete track.

2.7 Improving the resolution

If the values for track width and camera height (see 4.4 on page 24) are adjusted correctly the resolution of the system is 1mm. The resolution can be improved by applying the following trick:

Example: Installation height: 100 mm, track width: 25 mm

- Enter 200 mm as installation height and 50 mm for the track width, then the resolution will be 0.5 mm
- when entering 400 mm as installation height and 100 mm as the track width, the resolution increases to 0.25 mm

The thresholds for the deviation warning have to be altered correspondingly.

2.8 Design of the barcode

2.8.1 Structure of the 2/5 interleaved barcode

The interleaved barcode is a numeric code which can present the digits from 0 to 9. The code is made up of two bold and three narrow lines or two bold and three narrow spaces. The first figure is made up of five lines, the second consists of the spaces which follow the aforementioned lines.

This is prefixed by a start code that consists of a narrow line and a narrow space followed by another narrow line. The code ends with a bold line followed by a narrow space and a narrow line. Due to these different codings it is not important whether the code is read “normal“ or “upside down“. So the decoding is not connected to the driving direction. Furthermore there have to be so called rest zones in front of the first and behind the last line (see Figure 1 on page 6).

NOTE! A code check is not implemented since then the label would have to be twice as high.

2.8.2 Width of the barcode label

The minimal width of the module (this means the width of a narrow line or space) depends on the reading distance and the resolution of the camera. The minimal module width of the camera HG 73841 at 100mm reading distance is 1 mm. So the smallest label measures 26 mm from the beginning of the first line to the end of the last line.

2.8.3 Further geometrical facts of the code label

The smaller the module (width if lines) the more sensitive the interpreter reacts to no or a wrong decoding. The barcode shown in picture 1 has been created using one of the numerous shareware programs available in the Internet and has a module width of 1.5 mm (32 mm code width).

2.8.4 Inverse track

If the interpreter is parametrized to inverse track (light track on dark ground) the barcode also has to be inverted.

2.8.5 Length of the barcode label

It is necessary to assure that the label is at least for the duration of on picture (20ms) within the lens coverage. So the length of the label is determined by:

L [mm] > 20ms x Vmax [mm / ms]

2.8.6 Position

In general, the label can be located practically everywhere in the field of view. Only two things have to be taken in consideration:

- there can only be one label. If there are more than one label, only the left label in driving direction will be interpreted
- the label may be detected as track, so it is recommended to place the label directly upon the track

2.9 Image Optimization

Using `Luminance`, `Contrast` and `Gamma` in the `Image Settings` menu the image recognition can be optimized:

- `Luminance`: Brightens the whole image
- `Contrast`: Increases the differences between dark and light parts
- `Gamma`: Non-linear manipulation of the incline between two brightness values

Changing those values does not change the image output via a video grabber. Those values only affect the output of the menus `Luminance Histogram`, `Data of Video Line`, `Covariance Values` and `Pixel Correction`.

The `Luminance Histogram` displays the frequency distribution of the gray tones of the image (luminance degrees). Here two narrow lines with a distance as high as possible between them should be shown (track and background). The values are darker the more to the left they are shown).

In the menu `Data of Video Line` the brightness distribution across the detected line is shown. Here the track should be shown sharply separated. The darker a value the less its amplitude. `Covariance Values` shows the results of the covariance function. Again a clear peak above the track should be visible. `Pixel Correction` shows the characteristic curve resulting from the luminance, contrast and gamma settings.

Tip! During tests the following (pre-)settings have proven to be advantageous for many applications:

- Luminance = 45 %
- Contrast = 65 %
- Gamma = 1

3 Hardware

3.1 Block Diagram

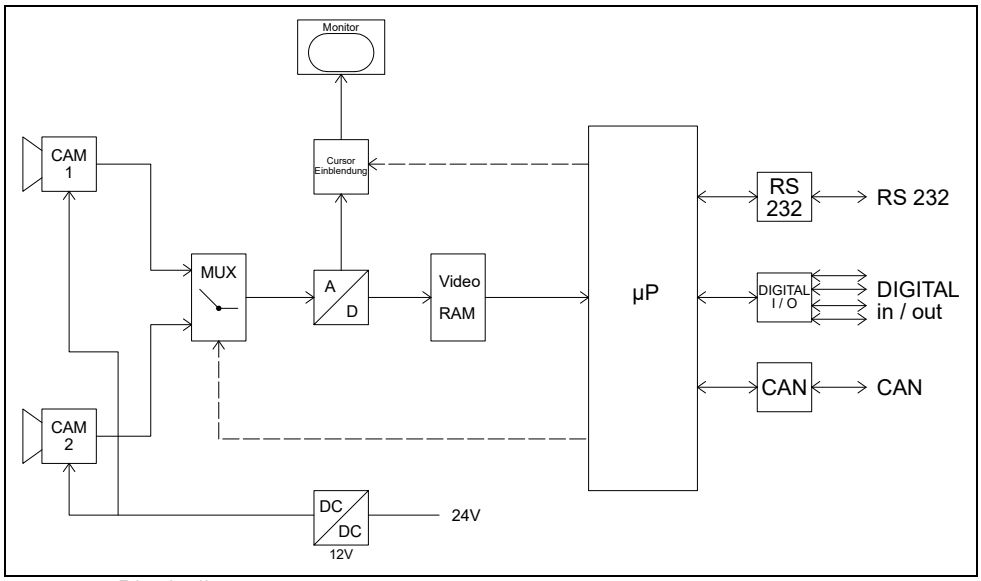

Figure 5 Block diagram

3.2 Casing

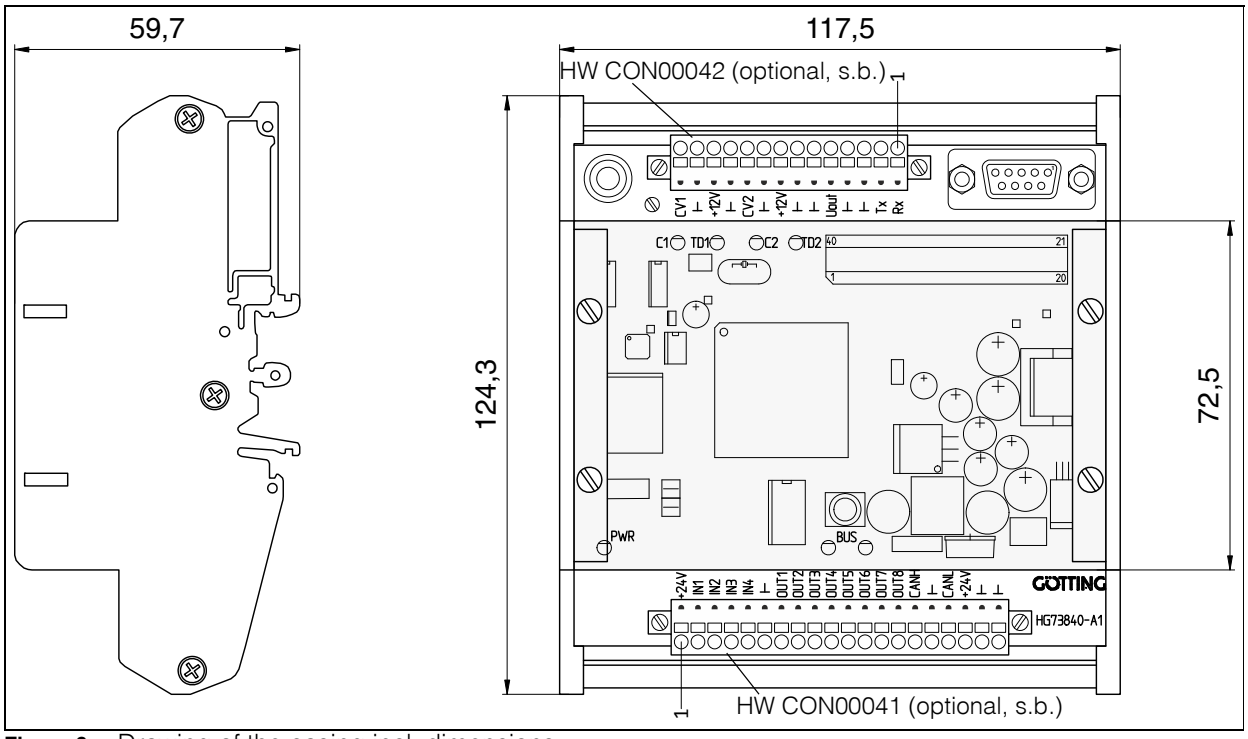

Figure 6 Drawing of the casing incl. dimensions

3.3 Pin Allocations

Two rows of Phoenix pin contacts are available for the connection of the Optical Line Tracker, using the corresponding plugs (to screw or to clamp). The required counter parts can be ordered from Götting KG. The part numbers for ordering are:

- 20-pin: HW CON 00041
- 14-pin: HW CON 00042

Furthermore a cinch socket for the connection of a control monitor or Frame Grabber and a 9 -pin Sub-D socket for the connection of the PC (used for setting parameters via the serial (RS 232) interface and a 1:1 cable) are provided. The individual contacts are labelled on the board.

Pin	Upper row of contacts (optionally with plug HW CON00042)	
1	Rx	Serial RS232 Input (parallel to Pin 3 of the 9-pin Sub-D socket)
2	Tx	Serial RS232 Output (parallel to Pin 2 of the 9-pin Sub-D socket)
3	Ground	Signal Ground
4	Ground	Analog Ground
5	Uout	Analog Output ±10 V (max ±1 mA) for track deviation
6	Ground	Analog Ground
7	Ground	Camera Ground
8	+12 V	Camera 2, power supply max. 150 mA
9	Ground	Video Ground
10	CV2	Composite Video Input Camera 2 (75 Ohm)
11	Ground	Camera Ground
12	+12 V	Camera 1, power supply max. 150 mA
13	Ground	Video Ground
14	CV1	Composite Video Input camera 1 (75 Ohm)

Table 1 Configuration of upper row of contacts (14 pin)

Pin	Lower row of contacts from left to right		
1	+24 V	24 V Output (e.g. for activating digital inputs IN1 - IN4)	
2	IN1	Track selection 1 (branching - enabled according to table 3)	
3	IN2	Track selection 2 (branching - enabled according to table 3)	
4	IN3	Camera selection (< 9 V: camera 1 active, > 15 V: camera 2 active)	
5	IN4	Select parameter set	
6	Ground	Ground for digital outputs OUT1 - OUT 8	
7	OUT1	Lateral deviation > +threshold 1	or: lowest barcode bit C0
8	OUT2	Lateral deviation > +threshold 2	or: barcode bit C1
9	OUT3	Lateral deviation < -threshold 1	or: barcode bit C2
10	OUT4	Lateral deviation < -threshold 2	or: barcode bit C3
11	OUT5	pulse output with adjustable length and time lag: barcode decoded	
12	OUT6	No error identified	
13	OUT7	Track quality poor	
14	OUT8	Track identified	
15	CANH	CAN connection	
16	Ground	CAN ground	
17	CANL	CAN connection	
18	+24 V	24 V / approx. 300 mA (2 cameras HG 73841ZA connected) supply	
19	Ground	Supply ground	
20	Ground	Supply ground	

Table 2 Configuration of lower row of contacts (20 pin)

IN1	IN2	Description
0	0<	Analog output not enabled
1	0	Follow right track
0	1	Follow left track
1	1	Follow the track with the highest covariance value (there should be only one track in sight)

Table 3 Track selection (1 is active, 0 is inactive)

The parallel inputs are active for input voltages in the range of 15 V to 30 V and inactive for voltages < 9 V. Not connected (n.c.) inputs are internally connected to ground. For the inputs, a variable debounce time can be set (refer to menu `Output-Input Settings` in section 4.5 on page 26).

The parallel output drivers apply 24 Volts to the terminals and are short circuit proof. In case a short circuit occurs, the corresponding output will be switched off. The red bus LED is continuously alit, as long as the error is there and the corresponding status bit is set. This situation is managed depending on the operating mode:

- CANopen®: By overwriting address 0x6100 index 01, the port module is switched on again, in case the short circuit has been resolved.
- Serial interface: Due to the input of the configuration sequence the interface unit will be switched on, if no short circuit is detected.
- PLC Mode: Every 500 ms the unit undertakes switch-on re-tries. The signal OUT6 (no error detected) is now synchronized with the 500 ms cycle and 20 ms switch-on.

The analog output is short circuit proof. With regards to offset and amplitude, it can be set to other values than 0 V and ±10 V. The output voltage is always scaled in such a way that the voltage range covers the complete range of view.

3.4 Control LEDs

There are four groups of LEDs inside the perspex cover:

1. (PWR) The green LED indicates the power supply.
2. BUS and CANopen®
   - (BUS) The red LED flashes each time the CAN-Bus is in OFF status. It is also lit whenever there is a system error (also refer to Description of the System Status Byte in Table 7 on page 35).
   - The green LED shows the CANopen® status of the device:
     `Node stop:` slow flashing,
     `Node reset communication` as well as `node pre-operational:` fast flashing,
     `Node operational:` LED continuously lit.
3. Camera and Track
   - (C1, C2) green LEDs for indicating the currently active camera input.
   - (TD1, TD2) These yellow LEDs indicate whether one of the cameras has recognized a valid track.
4. A 20-digit LED bar for indicating the location of a recognized track. All 20 LEDs are flashing for the period of 10 seconds at the serial interface. During this time the access of the monitor request through the entry of [+][+][+] (within two seconds) with the interface parameters 38400 baud, even parity, one stop bit is possible (refer to section 4.3 on page 22).

3.5 Operation with CANopen® Interface

In this operational mode, the input data is transmitted via RxPDO (refer to Table 14 on page 43). The outputs are managed as described in section 3.7 on page 19 below. In addition, the output information will be output via a TxPDO (refer to Table 8)

3.6 Operation with serial interface (RS 232) interface

In this control mode the input information will be transmitted as serial sequence. The output information will also be transmitted as a 10 byte telegram.

3.7 Operation with parallel digital/analog interface (PLC)

In order to operate the Optical Line Tracker using this interface unit, the following connections have to be made:

- In case an operation without turn offs is planned, it is necessary to parallel the inputs `IN1` and `IN2`. The analog output for the track deviation is deactivated whenever `IN1` and `IN2` are either not connected or inactive.
- Whenever only one camera is used, the input `IN3` (camera selection) may either remain blank or may be connected to ground. In this case, the camera must be connected to `IN1`.
- Output OUT8 is activated as soon as the covariance maximum exceeds the set threshold (refer to menu `Image Settings` in section 4.4 on page 24 in chapter `Setting Parameters`). The value of the voltage at the analog output indicates the location of the guidance track within view (the lateral deviation from the center of the field of vision).
- In case the track quality (value of the covariance maximum) decreases below a set threshold, output `OUT7` is activated. In such a case, the vehicle could, for example, drive slower in order to securely get through an area of bad tracking quality.
- For higher security reasons, output `OUT6` has been created: once the device has been switched on it becomes inactive if it is detected that the EEProm's set of parameters is faulty. In addition, it becomes inactive in case an activated output (`OUT1` - `OUT8`) is short-circuited. In the latter case, a check is carried out every 500 ms, investigating whether the short-circuit is still there. If not, the corresponding output will be re-activated. During this examination, which takes 20 ms, `OUT6` is activated.
- Furthermore, 2 independent symmetrical deviation threshold can be put out:
  In case the deviation from the track is greater than the value set for threshold 1, `OUT1` activated. If the deviation from the track is less than the negative value of threshold 1, `OUT3` is activated.
  In case the deviation from the track is greater then the value set for threshold 2, `OUT2` is activated. If the deviation from the track is less than the negative value of threshold 2, `OUT4` is activated.
  The values for thresholds 1 and 2 may be changed in menu `Output-Input Settings`. These outputs may also be used for controlling the velocity of the vehicle.
- It is possible to set certain parameters related to the behaviour of the analog output in case the track ends or cannot be read anymore:
  Either value 0 V (or the voltage value corresponding to the offset value) is put out or the old value is maintained.

- The four sets of parameters are assigned to the digital inputs as follows:

Input		
IN3 (camera)	**IN4 (set of parameters)**	**Set of parameters no.**
0 (camera 1 active)	0	1
0 (camera 1 active)	1	2
1 (camera 2 active)	0	3
1 (camera 2 active)	1	4

Table 4 Allocation of the sets of parameters

The PLC interface has to be activated in menu `Output-Input Settings` (section 4.5 on page 26) using submenu `Parallel Input Active`.

4 Software / Parameter Settings

The system can be programmed using a software which is running in the interpreter. To establish a connection to this software you have to connect the serial interface of a PC with the RS-232 interface of the interpreter. Then start a terminal program on your PC. If using a serial interface, a few distinctions have to be considered, see section 6 on page 53.

4.1 Terminal program

You can use any terminal program that supports the VT52 emulation. If you don‘t have any terminal program installed you can use the program HyperTerminal® that we use as a synonym for terminal programs (aka HyperTerm, free to use up to version 6.3). It is available from the following address: https://www.hilgraeve.com/hyperterminal/ Set the program to the following parameters.

4.2 Parameter Settings

The following parameters are necessary. Those settings are applied in the CANopen® mode as well as at the serial interface always in the first 10 seconds after switching-on.

Terminal settings configuration program (see section 4.3)	
Baud rate	38400 baud
Terminal emulation	VT52
Parity	even
Data bits	8
Stop bits	1
Handshake	none
PC interface (Port)	COM1 may vary on some PCs (see below)

Table 5 Terminal settings for the configuration program

If you use another port than `COM1` but want to use HyperTerminal you have to switch the port as follows:

1. In the menu `Data` choose the submenu `Properties` (or click on the icon). The following window pops up:

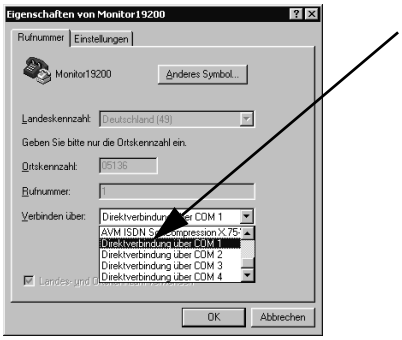

2. Choose in the submenu `Connections` the corresponding port and confirm with `OK.` Save the altered parameters when receiving the corresponding message while closing the program.

4.3 Using the configuration program

The terminal (PC with Hyperterm program) is to be connected to the interpreter via the corresponding socket.

- CANopen®: The interface parameters are shown in Table 5 on page 21. After entering M the monitor will start.
- Serial Interface: After switching on the optical line tracker, it will always start with the serial configuration as shown in table 5 on page 20 for the period of 10 seconds to enable a connection even though there is an unknown parameter. During this period all LEDs on the LED bra blink.
  Afterwards the interpreter switches to the parameters set in the serial menu (see section 4.6 on page 29), if they have been changed from the default. The service menu can be activated at any time via the sequence (pause >=0.1 sec, + + + within two seconds, pause >=0.1 sec).

Then the following menu appears in HyperTerm:

```
Peak 22356 @ 263   X/mm:     3   S: 4030 Code: 255  SCmin:   0 %


    (I)mage Settings
    (O)utput-Input Settings
    (C)AN Menu
    (V)24 Menu
    (B)ar Code

    (L)uminance Histogram
    (D)ata of Video Line
    (K) Covariance Values
    (P)ixel Correction
    (S)tatus Bits


    [W]rite user parameters to EEProm
    (M)aintenance

    (Q)uit

    Software Version  73840A32.09 / 26.JUN.2014    Serial Number: 99999
```

Figure 7 Screenshot: Main menu

The upper line shows the calculated values:

Peak:	Maximum of the covariance function.
@:	Location of the maximum in pixels.
X/mm:	The lateral deviation value in millimeters within the range of max. -500 to +500 mm.

Status: Hexadecimal output of system status, similar to the output PDO_1 for CANopen®, refer to Table 7 on page 35. Entering (B) enables viewing the set status bits as plain text messages (refer to Figure 22 on page 35).

S: With the entry of S the set status- and configuration bits as a plain text can be shown (refer to Figure 22 on page 35.

Code: displays the decoded barcode

SCmin: the corresponding minimal symbol contrast

Menu Selection:

NOTE! Menu points in squared brackets `[x]`are protected with the password 0815.

- I initiates a submenu for input of values for image processing (refer section 4.4 on page 24).
- O enables setting the parallel in/outputs and the output voltage (refer to section 4.5 on page 26).
- C opens the CAN menu (refer to section 4.6 on page 28).
- V starts the menu for the serial configuration.
- menu B opens the barcode menu.
- L generates a diagram indicating the brightness distribution along the line, see section 4.9 on page 30.
- D generates the brightness values of a line above the location (refer to section 4.10 on page 31).
- K displays the calculated covariance function (refer to section 4.11 on page 32).
- With P the Luminance correction can be shown.
- With S the set parameter and configuration bits as plain text message can be displayed (see 4.13 on page 35).
- Changed parameters can be saved to the EEProm with the entry of W. For this the password of 0815 has to be entered.

4.4 (I)mage Settings

In the second line, the set of parameters for which the menu was activated is displayed.

```
Peak 21543 @ 237   X/mm:    -1   S: 4030 Code: 255  SCmin:   0 %

    Parameterset:               1       (CAM 1, PARA_SET = 0)

    (S)tartline                         [30.255]:    80
    (I)nverse Track                     Black on White
    (W)idth of track                    [mm]:        24
    (H)eight of Camera                  [mm]:       100
    (P)eak threshold                    [>1000]:   6000
    Warning (T)hreshold                            7000
    L(u)minance                         [0..100%]:   50
    C(o)ntrast                          [0..100%]:   50
    (G)amma                             [pos]:     1.00

    (1)X-Threshold for Output 1,2       [1..500]:    10
    (2)X-Threshold for Output 3,4       [1..500]:    15

    Calib-(f)actor                   [(H*pix)/W]:   490
    (A)djust width of reference track (current 117 pix)

    (C)heck Width of Track                            0

    (Q)uit
```

Figure 8 Screenshot: Menu Image Settings

- S enables defining the line within the picture in which the evaluation is to be started. The defined line is marked on the video control monitor by a cursor. The line should be defined to be within the area of the visible picture, while possible reflections from the camera lighting should be outside this line.
- I enables selecting the track variant: white track on dark ground or black track on light ground.
- W enables setting the width of the track in millimeters. It should not be more than 1/3 of the width of the display on the monitor. Otherwise the track must be made thinner or the camera has to be installed higher.
- The installed height of the camera in millimeters is entered via H.
- P enables setting the detection threshold for the track recognition. The maximum of the covariance function (refer to `Peak` of the status line in Figure 22 on page 35) must exceed this threshold in order to enable track recognition. If the track widths are significantly larger or smaller than the set track width parameter, or the track contrast is very poor, the maximum of the covariance function will fall below the threshold value.
- T enables setting a Warning threshold. If the maximum of the covariance function falls below this threshold, output `OUT7` is activated.
- With U, O and G a function for the Luminance of the picture points can be changed similar to the Luminance- /contrast settings of a television. With the value Gamma this function can also be adjusted non-linear.

- 1 and 2 enable setting the values of the 2 possible monitoring thresholds in millimeters. For example, if the track deviation exceeds the value +10 mm or falls below -10 mm, the corresponding status bit is set and the digital output switched to + 24 V (refer to Table 2 on page 17 and Table 7 on page 35).
- F enables setting a known camera calibration factor. In case this calibration factor is not known, it is necessary to determine its value by following the below described procedure:
- In order to enable the conversion of camera pixels into track width in millimeters, it is necessary to determine the relation between track width in pixels, track width in millimeters and installation height of a given camera. This can be achieved by pressing A and the corresponding sub menu `(A)djust width of track with image cursor` (see below). The Optical Line Tracker HG G-73840ZC is factory set for camera HG 73841ZB.
- Q returns to the main menu.

The sub menu `(A)djust width of track with image cursor` is structured as follows:

```
Peak     0 @   0   X/mm:     0   S: 0032



    (S)et Start of Cursor                [0.. 500 pixel]:  166
    (W)idth of Cursor                    [0.. 166 pixel]:  145
    (H)eight of Camera                   [10..1000 mm]:    100
    (G)auge of Reference Track           [0..500 mm]:       24

    Calib-factor [(H*pix)/S] = 604





    (Q)uit
```

Figure 9 Screenshot: Determination of the calibration factor in submenu (A)djust width of track with image cursor

This menu enables calibrating the Optical Line Tracker for a certain camera. In order to do so position the camera above the guidance track. The track width in millimeters and the installation height of the camera in millimeters are to be input correctly via G and H. Then set the start of the track width now displayed on the screen onto the left hand side of the track using S. Afterwards use W to set the width of the marked area and make sure the marked area covers the track exactly. The calibration factor is then displayed. The quit the submenu by pressing Q.

The set parameters now have to be permanently saved within the main menu by pressing W. The calibration value determined for a certain type of camera can be directly transferred to other Optical Line Trackers if the same type of camera is used.

- If C is activated additionally the width of the covariance function is checked. This value is the only value in this menu that is the same for all four parameter sets.
- Q returns to the main menu.

4.5 (O)utput-Input Settings

This menu offers the option of changing the setting of the outputs OUT_1 to OUT_4. According to the selection of menu point (X) these outputs will be used as indicators for the lateral deviation or as the code output for the low-ordered 4 bits of the bar code.

In the following figure the outputs OUT_1...OUT_4 were selected for the code output:

```
Peak 27889 @ 265   X/mm:     4   S: 4000 Code: 255  SCmin:   0 %


         Parallel Output:
    (X)-Deviation on OUT_1..OUT4
    (1)CODE_OK (OUT_5) setup time       [1..100 ms]:        20
    (2)CODE_OK (OUT_5) duration         [1..1000 ms]:      100

         Parallel Input:
    (P)arallel input active                                  1
    (D)ebounce time                     [0..100ms]:         50

         Analog Output:
    (A)mplitude                         [-10..10V]:      10.00
    (O)ffset                            [-5V..0..5V]:     0.00
    (H)old analog value on loss of track                     0
    (B)ridge a track gap (n*20 ms)      [0..25]:            20




    (Q)uit
```

Figure 10 Screenshot: Menu (O)utput-Input Settings - output of code

The menu points (1) and (2) have here the following meanings:

- By using 1 the time delay of the code output from OUT_1..OUT_4 to DATA_READY pulse to OUT_5 can be chosen.
- With 2 the duration of the DATA_READY pulse to OUT_5 can be set.

In the following figure the outputs OUT_1...OUT_4 will be used as indicators for lateral deviation:

```
Peak 28002 @ 265   X/mm:     4   S: 4000 Code: 255  SCmin:   0 %


         Parallel Output:
    (X) Barcode on OUT_1..OUT4



         Parallel Input:
    (P)arallel input active                                  1
    (D)ebounce time                     [0..100ms]:         50

         Analog Output:
    (A)mplitude                         [-10..10V]:      10.00
    (O)ffset                            [-5V..0..5V]:     0.00
    (H)old analog value on loss of track                     0
    (B)ridge a track gap (n*20 ms)      [0..25]:            20




    (Q)uit
```

Figure 11 Menu: Output-Input settings - output of deviation

- If the Optical Line Tracker is operated via the CANopen® or serial Interface, it is necessary to deactivate the parallel input using P, as otherwise the CAN Bus control is not possible. In the same way it is essential to activate the parallel input function when using the parallel ports. In this case, D enables setting a debounce time during which the input values have to be stable in order to be valid.
- A enables setting the amplitude, with O the offset of the analog output voltage is set. Thus, the settings shown in Figure 10 on page 26: Amplitude = 10 and Offset = 0, generate an output voltage within the range of ±10 V. The voltage is adjustable in steps of about 20 mV.
- In case the guidance track cannot be recognized, the behaviour of the analog output can be adjusted via H: Either the value 0 V (or the voltage value corresponding to the offset value) is output or the last value is held.
- Furthermore, B enables setting a gap filter. The set value is a picture counter which indicates for how many pictures the guidance track may cease to be recognized before output `OUT8` (track recognized) becomes inactive. This value multiplied by 20 ms is the duration of a possible tolerated gap.
- Q exits the submenu and returns to the main menu

4.6 C(A)N-Menu

```
Peak 27935 @ 265   X/mm:     4   S: 4000 Code: 255  SCmin:   0 %

Bus offline                        Last Err: 8801  TxBuf: 10

         (T) CAN active                                        1
         (N)ode ID                              [1..127]:      1
         CAN-(B)audrate[20,50,100,125,250,500,1000 kB]:    125
         (C) TPDO_1 mode                     [1..240,255]:    255
         (D) TPDO_1 inhibit time       [0,20..10000 ms]:      0
         (E) TPDO_1 event time         [0,20..10000 ms]:     20

         (I) Heartbeat time           [0,100..65535 ms]:      0

         (A)utostart                                           1
         (H)i Byte first                                       0

         (Q)uit
```

Figure 12 Screenshot: CAN Menu

In addition to the above described status line, the CAN bus status is displayed: Bus online switches to Bus offline in case e. g. the CAN bus connector is removed or the CAN bus controller switches to `BUSOFF` status due to a missing terminal resistor. Next to this message, the CAN open Node Status: stopped, pre-operational or operational is displayed.

Within this menu it is possible to

- switch the CANopen® output on/off with T, similarly the serial interface will be switched on/off.
- select the Node address within the range of 1 through 127 via N,
- select one of the listed Baud rates via B (Autobaud is not implemented),
- select the TPDO_1 operational mode via C. With the values 1 through 240 it is possible to choose between synchronous, cyclic and, with 255, asynchronous operational mode. The following two menu functions only exist for the asynchronous operational mode:
  - input the Inhibit time of the `TPDO_1` via D. In `TPDO_1` the system status and the calculated distances are transmitted. The Inhibit time is the shortest possible time period between two subsequential transmissions,
  - select the cycle time of the `TPDO_1` transmission via E. In case both values are 0, `TPDO_1` is not transmitted.
- change the so-called Heartbeat time via I. A control message is transmitted with this cycle time. If the Heartbeat time is 0, this function is suppressed. If a value is set for the Heartbeat time, the Toggle-Bit of the knot status is no longer changed by remote telegrams (Node Guarding Function).

- activate / deactivate the Autostart function via A:
  - If Autostart is deactivated, only the Heartbeat message is transmitted following the start-up (if activated); the device is then in status `pre-operational`.
  - If Autostart is activated, immediately upon start-up, `TPDO_1` and Heartbeat message (if activated) are transmitted; the device is then in status `operational`.
- set the byte sequence of the 16 Bit values within `TxPDO` and `RxPDO` via H.

4.7 (V)24 or Serial Menu

```
Peak 28002 @ 265   X/mm:     4   S: 4000 Code: 255  SCmin:   0 %



         (T) Serial active                                    1

         (B)audrate     [9600,19200,38400,57600Bd]:     57600
         (P)arity                          [E,O,N]:         E
         (S)top Bit                          [1,2]:         1

         (H)i Byte first                                      0

         (Q)uit
```

Figure 13 Screenshot: Menu output-input settings: Threshold output

In this menu

- the serial interface will be switched on/off with T, corresponding the CANopen® will be switched on/off.
- the interface parameter will be modified with B, P and S.

  NOTE! Up to 10 seconds after the start the interface will always be at 38400 baud, even parity and one stop bit.

- The byte sequence of the 16-bit value in the `TxPDO` will be adjusted with H.

4.8 Barcod(e) Menu

```
Peak     0 @ 135   X/mm:     0   S: 3030 Code:  10  SCmin:  80 %



    (M)in symbolcontrast                [1..100]:    7
    (R)un_in_out  (mm)                  [1..250]:   18
    M(o)dul  (mm)                       [1..250]:    6



    (Q)uit
```

Figure 14 Barcode menu

In this menu, the minimal symbol contrast Scmin can be set. This value is the threshold for detecting a barcode.

4.9 Luminance Histogram

In order to determine the suitability of the guidance track for secure detection, there‘s a Luminance histogram available that shows the brightness of the line. For each brightness value from 0 to 255 its occurrence is shown. This allows to evaluate the quality of the track. Ideally there are two upright lines that lie far apart.

```
Luminance-Histogram                              press any key to return
      200:......................0......................................0
      190:......................0......................................0
      180:......................0......................................0
      170:.....................00......................................0
      160:.....................00......................................0
      150:.....................00......................................0
      140:.....................00......................................0
      130:.....................00......................................0
      120:.....................00......................................0
      110:.....................00......................................0
      100:...................o.00....................................oo
       90:...................0.00....................................00
       80:...................0000....................................00
       70:...................0000....................................00
       60:...................0000o...................................00
       50:...................00000...................................00
       40:...................00000...................................00
       30:...................00000...................................00
       20:...................00000...................................00
       10:..............o.....00000...................................00
          +---+---+---+---+---+---+---+---+---+---+---+---+---+---+---+---
          0  16  32  48  64  80  96 112 128 144 160 176 192 208 224 240
```

Figure 15 Screenshot: Luminance intensity within a Luminance Histogram

The horizontal axis shows the possible luminance values between 0 (black) and 255 (white). Due to limited space 4 luminance values are always summed up to one value. The vertical axis shows the respective occurrences. The example given above shows a certain accumulation at maximum luminance and a second accumulation at less luminance. This enables perfect guidance track recognition. However e.g. a black-and-

white square pattern will give the same luminance picture, but at the same time be completely useless for track recognition. Therefore two additional diagrams are available.

4.10 (D)ata of Video Line

This diagram shows the Luminance values above the location (in pixels). The following diagram shows the example guidance track used in the luminance histogram above across a display line. The guidance track is clearly detected.

```
Video Line                                press any key to return
      256:..................oooooooooooooo................
      240:..................oooooooooooooo................
      224:.................ooooooooooooooo................
      208:.................ooooooooooooooo................
      192:.................ooooooooooooooo................
      176:.................ooooooooooooooo................
      160:.................ooooooooooooooo................
      144:................oooooooooooooooo................
      128:................oooooooooooooooo................
      112:...............ooooooooooooooooo................
       96:..oooooooooooooooooooooooooooooooooooooo.........
       80:..oooooooooooooooooooooooooooooooooooooooooooooo.
       64:..oooooooooooooooooooooooooooooooooooooooooooooooo
       48:ooooooooooooooooooooooooooooooooooooooooooooooooo
       32:ooooooooooooooooooooooooooooooooooooooooooooooooo
       16:ooooooooooooooooooooooooooooooooooooooooooooooooo
          ----+----+----+----+----+----+----+----+----+----+
              50  100  150  200  250  300  350  400  450  500
```

Figure 16 Screenshot: Display of one video line (menu Video Line (V)alues)

The result of the interpretation algorithm is shown in the following diagram.

4.11 (K) Covariance Values

This diagram shows the results of the Covariance function over the location (in pixels):

```
Covariance                              press any key to return
    20000:...................................................
    19000:...................................................
    18000:...................................................
    17000:...................................................
    16000:.........................Mo........................
    15000:.........................MO........................
    14000:........................OMO........................
    13000:........................OMOo.......................
    12000:........................OMOO.......................
    11000:.......................oOMOO.......................
    10000:......................OOMOOO.......................
     9000:......................OOMOOO.......................
     8000:.....................oOOMOOO.......................
     7000:....................OOOMOOOO.......................
     6000:....................OOOMOOOO.......................
     5000:...................oOOOMOOOOo.....................
     4000:...................OOOOMOOOOO.....................
     3000:..................OOOOOMOOOOOO....................
     2000:.................OOOOOOMOOOOOOO...................
     1000:..oOOO............oOOOOOOMOOOOOOOO................
          ----+----+----+----+----+----+----+----+----+----+
             50  100  150  200  250  300  350  400  450  500
```

Figure 17 Screenshot: Covariance values within menu (K) Covariance Values

At the point where the result of the function reaches a maximum, an `M` is displayed. This diagram is an aid for the determination of the best value of `Peak threshold` within menu `Image Settings` in section 4.4 on page 24.

4.12 (P)ixel Correction

In this diagram the relation between the luminance value of the camera, which is given, and the luminance value of the processing, which is preferred, will be displayed. In the case luminance = 50%, contrast = 50% and gamma = 1 it will be a straight line, which means the luminance value will not be changed:

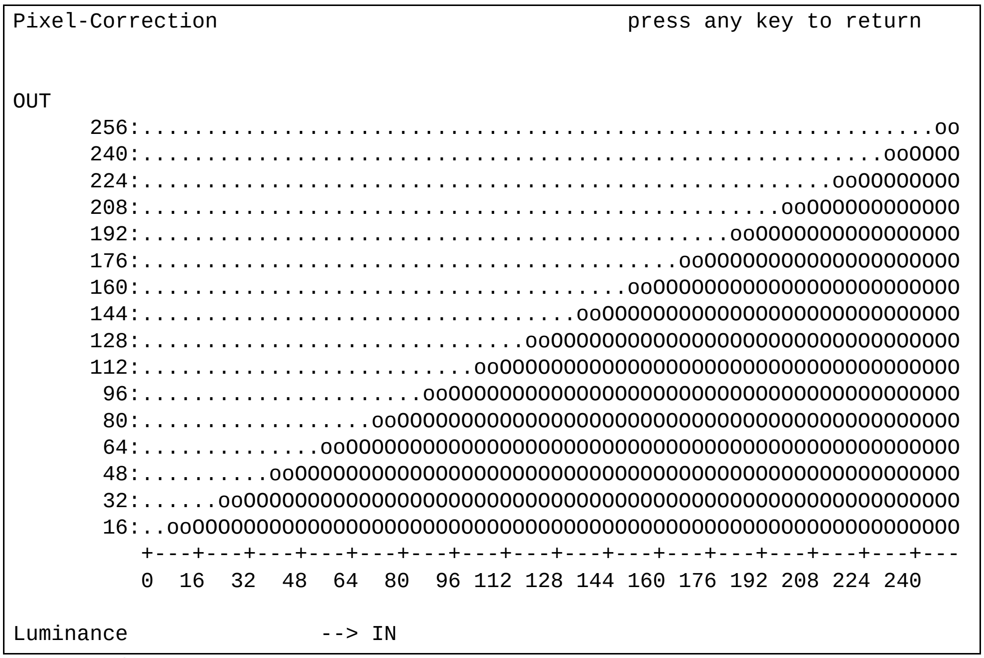

```
Pixel-Correction                                press any key to return


OUT
      256:..............................................................oo
      240:..........................................................ooOOOO
      224:......................................................ooOOOOOOOO
      208:..................................................ooOOOOOOOOOOOO
      192:..............................................ooOOOOOOOOOOOOOOOO
      176:..........................................ooOOOOOOOOOOOOOOOOOOOO
      160:......................................ooOOOOOOOOOOOOOOOOOOOOOOOO
      144:..................................ooOOOOOOOOOOOOOOOOOOOOOOOOOOOO
      128:..............................ooOOOOOOOOOOOOOOOOOOOOOOOOOOOOOOOO
      112:..........................ooOOOOOOOOOOOOOOOOOOOOOOOOOOOOOOOOOOOO
       96:......................ooOOOOOOOOOOOOOOOOOOOOOOOOOOOOOOOOOOOOOOOO
       80:..................ooOOOOOOOOOOOOOOOOOOOOOOOOOOOOOOOOOOOOOOOOOOOO
       64:..............ooOOOOOOOOOOOOOOOOOOOOOOOOOOOOOOOOOOOOOOOOOOOOOOOO
       48:..........ooOOOOOOOOOOOOOOOOOOOOOOOOOOOOOOOOOOOOOOOOOOOOOOOOOOOO
       32:......ooOOOOOOOOOOOOOOOOOOOOOOOOOOOOOOOOOOOOOOOOOOOOOOOOOOOOOOOO
       16:..ooOOOOOOOOOOOOOOOOOOOOOOOOOOOOOOOOOOOOOOOOOOOOOOOOOOOOOOOOOOOO
          +---+---+---+---+---+---+---+---+---+---+---+---+---+---+---+---
          0  16  32  48  64  80  96 112 128 144 160 176 192 208 224 240

Luminance               --> IN
```

Figure 18 Screenshot: Lumin. correction function L = 50, C = 50, G = 1

An increase in luminance to e.g. 70% will move the function „up“:

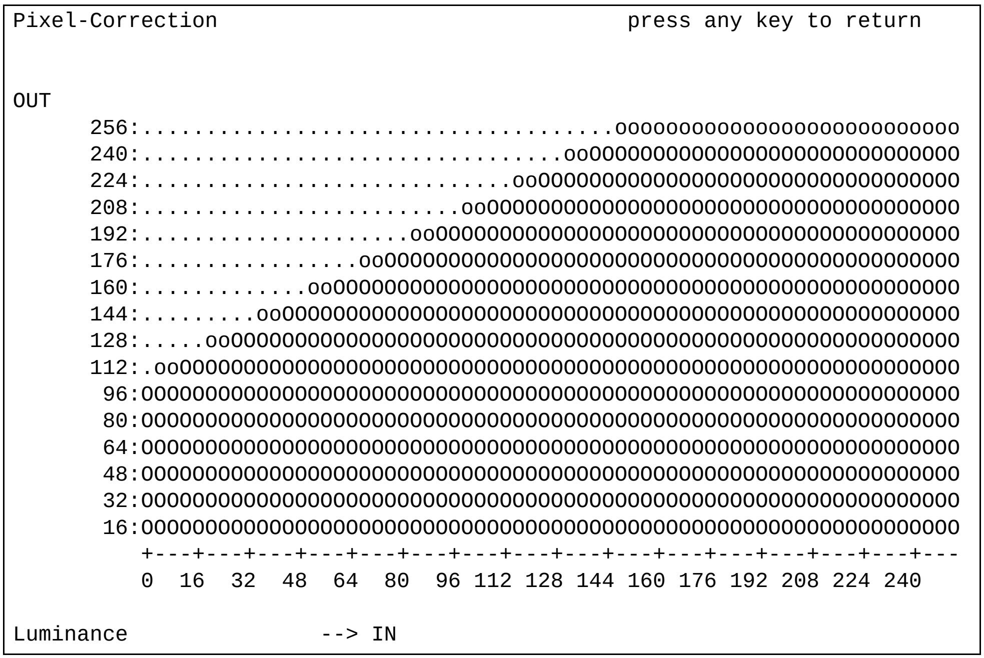

```
Pixel-Correction                                press any key to return


OUT
      256:.....................................ooooooooooooooooooooooooooo
      240:.................................ooOOOOOOOOOOOOOOOOOOOOOOOOOOOOO
      224:.............................ooOOOOOOOOOOOOOOOOOOOOOOOOOOOOOOOOO
      208:.........................ooOOOOOOOOOOOOOOOOOOOOOOOOOOOOOOOOOOOOO
      192:.....................ooOOOOOOOOOOOOOOOOOOOOOOOOOOOOOOOOOOOOOOOOO
      176:.................ooOOOOOOOOOOOOOOOOOOOOOOOOOOOOOOOOOOOOOOOOOOOOO
      160:.............ooOOOOOOOOOOOOOOOOOOOOOOOOOOOOOOOOOOOOOOOOOOOOOOOOO
      144:.........ooOOOOOOOOOOOOOOOOOOOOOOOOOOOOOOOOOOOOOOOOOOOOOOOOOOOOO
      128:.....ooOOOOOOOOOOOOOOOOOOOOOOOOOOOOOOOOOOOOOOOOOOOOOOOOOOOOOOOOO
      112:.ooOOOOOOOOOOOOOOOOOOOOOOOOOOOOOOOOOOOOOOOOOOOOOOOOOOOOOOOOOOOOO
       96:OOOOOOOOOOOOOOOOOOOOOOOOOOOOOOOOOOOOOOOOOOOOOOOOOOOOOOOOOOOOOOOO
       80:OOOOOOOOOOOOOOOOOOOOOOOOOOOOOOOOOOOOOOOOOOOOOOOOOOOOOOOOOOOOOOOO
       64:OOOOOOOOOOOOOOOOOOOOOOOOOOOOOOOOOOOOOOOOOOOOOOOOOOOOOOOOOOOOOOOO
       48:OOOOOOOOOOOOOOOOOOOOOOOOOOOOOOOOOOOOOOOOOOOOOOOOOOOOOOOOOOOOOOOO
       32:OOOOOOOOOOOOOOOOOOOOOOOOOOOOOOOOOOOOOOOOOOOOOOOOOOOOOOOOOOOOOOOO
       16:OOOOOOOOOOOOOOOOOOOOOOOOOOOOOOOOOOOOOOOOOOOOOOOOOOOOOOOOOOOOOOOO
          +---+---+---+---+---+---+---+---+---+---+---+---+---+---+---+---
          0  16  32  48  64  80  96 112 128 144 160 176 192 208 224 240

Luminance               --> IN
```

Figure 19 Screenshot: Lumin. correction function L = 70, C = 50, G = 1

An increase in the contrast rotates the function around the point (128,128):

```
Pixel-Correction                                  press any key to return


OUT
      256:.............................................oooooooooooooooooooooo
      240:............................................oooooooooooooooooooooo
      224:...........................................oooooooooooooooooooooooo
      208:..........................................oooooooooooooooooooooooo
      192:.........................................ooooooooooooooooooooooooo
      176:........................................oooooooooooooooooooooooooo
      160:.......................................ooooooooooooooooooooooooooo
      144:......................................oooooooooooooooooooooooooooo
      128:.....................................ooooooooooooooooooooooooooooo
      112:....................................oooooooooooooooooooooooooooooo
       96:...................................oooooooooooooooooooooooooooooo
       80:..................................ooooooooooooooooooooooooooooooo
       64:...............................oooooooooooooooooooooooooooooooo
       48:..............................ooooooooooooooooooooooooooooooooo
       32:.............................oooooooooooooooooooooooooooooooooo
       16:...........................ooooooooooooooooooooooooooooooooooo
          +---+---+---+---+---+---+---+---+---+---+---+---+---+---+---+---
          0  16  32  48  64  80  96 112 128 144 160 176 192 208 224 240

Luminance                 --> IN
```

Figure 20 Screenshot: Lumin. correction function L = 50, C = 80, G = 1

A change in gamma (e.g. to 0.45) gives a non-linear function ($f(x) \approx 10^x$):

```
Pixel-Correction                                  press any key to return


OUT
      256:.............................................................oooo
      240:...........................................................oooooooooooo
      224:.........................................oooooooooooooooooooooooo
      208:...................................oooooooooooooooooooooooooooooo
      192:...........................oooooooooooooooooooooooooooooooooooo
      176:......................oooooooooooooooooooooooooooooooooooooooo
      160:..................oooooooooooooooooooooooooooooooooooooooooooo
      144:...............oooooooooooooooooooooooooooooooooooooooooooooo
      128:...........oooooooooooooooooooooooooooooooooooooooooooooooooo
      112:........oooooooooooooooooooooooooooooooooooooooooooooooooooooo
       96:......oooooooooooooooooooooooooooooooooooooooooooooooooooooooo
       80:....ooooooooooooooooooooooooooooooooooooooooooooooooooooooooo
       64:..ooooooooooooooooooooooooooooooooooooooooooooooooooooooooooo
       48:.ooooooooooooooooooooooooooooooooooooooooooooooooooooooooooo
       32:.oooooooooooooooooooooooooooooooooooooooooooooooooooooooooo
       16:ooooooooooooooooooooooooooooooooooooooooooooooooooooooooooo
          +---+---+---+---+---+---+---+---+---+---+---+---+---+---+---+---
          0  16  32  48  64  80  96 112 128 144 160 176 192 208 224 240

Luminance                 --> IN
```

Figure 21 Screenshot: Lumin. correction function L = 50, C = 50, G = 0,45

4.13 (S)tatus Bits

In this menu the state of the status bits and their respective meaning is shown.

```
Peak 22359 @ 263   X/mm:     3   S: 4030 Code: 255  SCmin:   0 %


           State: 4030                  Config: E1C9

     2^0:    0 (PARAM_CRC_OK)                   1 (CANopen AUTOSTART)
     2^1:    0 (PAR_OUT_OK)                     0 (CAM_1)
     2^2:    0 (NO_TRACK_L_DET)                 0 (NO WIDTH_CHECK)
     2^3:    0 (NO_TRACK_R_DET)                 1 (Black on White P1)
     2^4:    1 (TURN_RI)                        0 (ANALOG_CLEAR)
     2^5:    1 (TURN_LE)                        0 (SER/CAN IN)
     2^6:    0 (CAM_1)                          1 (TURN_RI)
     2^7:    0 (PARA_1)                         1 (TURN_LE)
     2^8:    0 (THR_2_RI)                       1 (SERIAL)
     2^9:    0 (THR_1_RI)                       0 (LO-Byte first)
    2^10:    0 (THR_1_LE)                       0 (NO EDGE)
    2^11:    0 (THR_2_LE)                       0 (DEVIATION_OUT)
    2^12:    0 (NO CODE)                        0 (PARA_SET 1)
    2^13:    0 (TRACK_GOOD)                     1 (Black on White P2)
    2^14:    1 (TRACK DETECT)                   1 (Black on White P3)
    2^15:       -                               1 (Black on White P4)
```

Figure 22 Screenshot: Status bits als plain text

NOTE! The following table shows the meaning of the status bits from the left column in Figure 22. The description of the config bits in the right column is shown in Table 40 on page 54.

Value	Meaning when not set (0)	Meaning when set (1)
0x0001	EEProm parameters without errors	Error within EEProm parameters
0x0002	parallel outputs ok	parallel outputs short circuit
0x0004	no further track to the left	further track to the left of the current found
0x0008	no further track to the right	further track to the right of the current found

Table 7 Meaning of the status bits (part 1 of 2)

<table>
<tr><th>Value</th><th>Meaning when not set (0)</th><th>Meaning when set (1)</th></tr>
<tr><td>0x0010 *)</td><td colspan="2" rowspan="2">State of the parallel inputs IN1 and IN2 for turning and release of the analog output according to resp. Table 40 on page 54
<table>
<tr><th>IN2</th><th>IN1</th><th>Value in status</th><th>Meaning</th></tr>
<tr><td>0</td><td>0</td><td>0x..0.</td><td>no release of parallel output</td></tr>
<tr><td>0</td><td>1</td><td>0x..1.</td><td>turn right</td></tr>
<tr><td>1</td><td>0</td><td>0x..2.</td><td>turn left</td></tr>
<tr><td>1</td><td>1</td><td>0x..3.</td><td>straight on</td></tr>
</table>
Table 6 Coding of inputs IN1 and IN2</td></tr>
<tr><td>0x0020 *)</td></tr>
<tr><td>0x0040 *)</td><td>camera 1 aktiv</td><td>camera 2 aktiv</td></tr>
<tr><td>0x0080 *)</td><td>Parameter set 1 or 3 active</td><td>Parameter set 2 or 4 active</td></tr>
<tr><td>0x0100</td><td>Deviation signal < Threshold 2 right</td><td>Deviation signal > Threshold 2 right</td></tr>
<tr><td>0x0200</td><td>Deviation signal < Threshold 1 right</td><td>Deviation signal > Threshold 1 right</td></tr>
<tr><td>0x0400</td><td>Deviation signal > -Threshold 1 left</td><td>Deviation signal < -Threshold 1 left</td></tr>
<tr><td>0x0800</td><td>Deviation signal > -Threshold 2 left</td><td>Deviation signal < -Threshold 2 left</td></tr>
<tr><td>0x1000</td><td>no Barcode</td><td>decoding Barcode</td></tr>
<tr><td>0x2000</td><td>track quality good</td><td>track quality bad</td></tr>
<tr><td>0x4000</td><td>no track detected</td><td>track detected</td></tr>
<tr><td>0x8000</td><td colspan="2">toggles following each transmitted CAN PDO</td></tr>
<tr><td colspan="3">*) When the parallel interface is activated, the states of these bits are read via the digital inputs. When the parallel interface is deactivated they will be derived from the Config parameter [0x2000,03] (see Table 36 on page 53)</td></tr>
</table>

Table 7 Meaning of the status bits (part 2 of 2)

Whenever Threshold 2 is exceeded, the corresponding bit of threshold 1 remains set. Each time no track is detected, all 4 threshold bits are deleted.

In case the digital input interface is not accessible (refer to menu `Output-Input Settings` in section 4.5 on page 26), the turning commands received via the CAN bus are displayed in the status.

4.14 (M)aintenance

```
Peak 10612 @ 287   X/mm:     4   S: 4030 Code: 255  SCmin:   0 %



    (C)SV Values

    (W)rite User Parameters to Screen
    (I)mport User Parameters from Host to Antenna
    (E)xport User Parameters from Antenna to Host

    {S}ervicmenu
    [F]irmware Update
    [D]efault Values to EEProm

    (Q)uit









    Software Version  73840A32.01 / 04.MAR.2011    Serial Number: 9999999
```

Figure 23 Screenshot: Maintenance Menu

Via the maintenance menu the following functions can be selected:

4.14.1 (C)SV Values

The submenu was created to enable printing the most important values online. The values for `Status`, `Maximum of the Covariance function`, `Location (in Pixels)` of this maximum, `location of a possible 2nd maximum` and the `Deviation in Millimeters` are output. If two maxima are available, the one used for guidance is always set at first position. The values are separated by comma and e. g. may be recorded using Hyperterm and then stored into a file for analysis.

```
4330,17300, 370, 134,   20
4330,17273, 370, 134,   20
4330,17273, 370, 134,   20
4330,17282, 371, 134,   21
4330,17282, 371, 134,   21
4330,17251, 370, 134,   20
4330,17281, 370, 134,   20
4330,17281, 370, 134,   20
4330,17280, 371, 134,   21
4330,17280, 371, 134,   21
4330,17301, 371, 134,   21
4330,17301, 371, 134,   21
```

Figure 24 Screenshot: (C)SV Values output

4.14.2 (W)rite User Parameters to Screen

This submenu is used for recording parameter settings. The following message appears:

- Activate File recording, press any key to continue

Activate the function <Transmission><record text> in HyperTerm and press any key. All parameters are output with their names, a ',' and their value.

Afterwards deactivate this submenu in Hyperterminal via <Transmission> <record text> and <quit>. The values are now stored in the selected file.

4.14.3 (I)mport User Parameters from Host to Antenna / (E)xport User Parameters from Antenna to Host

It is possible to save resp. restore a user adjusted parameter set via the XMODEM file exchange protocol:

- With I the parameter file on a PC (host) can be loaded into the interpreter. After pressing I the XMODEM connection should be started within 50 seconds. In HyperTerminal the following can be used: *Transmission> send file> XMODEM> file name*. As soon as the data/file is correctly transmitted, checked and loaded into the parameter RAM, a message `success` appears on screen. To save a parameter set permanently in the interpreter, the parameters should be stored into the EEProm (via `[w]rite user parameters into EEProm` in the main menuas shown in Figure 7 on page 22).
- With E an adjusted parameter set can be transmitted from the interpreter to the PC (host) and they can be save there. After pressing E the XMODEM data-connection should be started. In HyperTerminal the following should be used *Transmission> receive file> folder* and then a data/file has to be chosen. After the transmission the message `success` appears on screen.

4.14.4 {S}ervice Menu

The service menu has no adjustable function for the user.

4.14.5 [F]irmware Update

It is possible to program the firmware into the processor of the interpreter via the serial interface. To do so, it is necessary to set up the serial connection to the PC. Afterwards you can, as described below, program the processor with a new firmware by using the software tools `FLASH269.EXE` on the PC.

The update program is a 32 bit software for use with Microsoft® Windows®. You can receive this application either on CD (as described below) or attached to an email upon request. Direct your request to one of the contact possibilities listed on the title page

4.14.5.1 Installation of the flash program

No formal installation is needed. Simply follow the following steps to run the program on your PC.

1. Create a directory for the executable file `FLASH269.EXE` (it will then create the program surface)

2. Copy the files `FLASH269.EXE and FLASH269.DLL` into this directory.

4.14.5.2 Using the flash program

Start the program FLASH269.EXE in the directory created above. The following mask appears:

Figure 25 Screenshot Flash ST10F269

Select the corresponding Firmware-Hex file and the relevant COM port. Then enter the password 815 via P and start the updating process with (F)irmware Update.

NOTE! It is important, that the HyperTerm connection is halted afterwards (e. g. via submenu <connect> <interrupt> or the corresponding Icon).

Now select <Program Target Device> within program <Flash ST10F269> and confirm the appearing question. Once the programming has been successful, it is essential to switch off the device and then switch it on again. The main menu (refer to Figure 7 on page 22) now displays the corresponding program version.

4.14.6 [D]efault Values to EEProm

All user parameter will be set back to the delivery state (standard values) and saved to the EEProm. Again, this menu has to be verified by entering the password 0815.

5 Data Interface CANopen®

The Node ID and the transmission rate have to be selected either according to the above described serial monitor or the corresponding SDOs. The measured values of the system are transmitted via a so-called TxPDO. SDOs are used for parameter setting. The CAN Identifier are determined from the Node address (1..127).

The parallel input has to be deactivated, in order to enable control (enable, turn, etc.) via the CAN bus. The deactivation is either generated in submenu `(O)utput-Input Settings` (refer to section 4.5 on page 26) or via RxPDO by deleting the corresponding configuration bit (see 5.2.2 on page 43).

5.1 Definition of the Terms CAN and CANopen®

The CAN / CANopen® configuration is implemented according to ISO 11898 resp. EN 50325-4. As an assistance some of the terms and abbreviations are explained in this section. For more specific information please refer to the corresponding norms or open the website http://www.can-cia.org/en/standardization/technical-documents/ where – after a free registration – you can download the technical specifications of the CANopen® standard.

For devices that support CANopen® Götting offers EDS files (Electronic Data Sheet) for download from its website at http://www.goetting-agv.com/components (and the sub pages). In those files the complete CAN configuration is defined. In order to use those files to e.g. configure CAN workflows with several devices a software like e.g. CANopen® Magic by PEAK System has to be used: http://www.canopenmagic.com

Value	cyclic	acyclic	synchronous	asynchronous	on request only (RTR)
0		x	x		
1-240	x		x		
241-251	reserved				
252			x		x
253				x	x
254				x	
255				x	

Table 8 Parameters PDO operation mode

Please observe that not each device supports all operation modes. Devices by Götting usually support the modes 1 to 240 and 255.

Operation Mode	Explanation
Cyclic	every n'th Sync telegram data is transmitted
Acyclic	transmits if an event has occurred since the last Sync telegram
Synchronous	data is transmitted after a Sync telegram is received
Asynchronous	data is transmitted event-driven
RTR	solely upon request via a Remote Frame
Inhibit Time	minimum time span that has to pass before the same PDO is sent again
Event Time	Whenever this time span ends an event is initiated. Is restarted after each event.

Table 9 PDO operation modes

Abbreviation	Name	Meaning
PDO	Process Data Objects	maximum 8 Byte process data
TxPDO	Transmit-PDO	the process data sent by a device
RxPDO	Receive-PDO	the process data received by a device
SDO	Service Data Objects	serves for reading and writing device parameters, no size limit
Sync	Synchronization Telegram	bus-wide telegram sent by the CANopen® Master
–	CAN Identifier	the address on which a PDO,SDO is sent
–	Node ID	CANopen®: the address of the device that is added to the CAN identifier

Table 10 Definition of terms CAN/CANopen®

Name	Meaning
Low Byte First	Little-Endian-Format, Intel Format the low byte of each multibyte value is sent first
High Byte First	Big-Endian-Format, Motorola Format the high byte of each multibyte value is sent first
Left-aligned	Order of the bits in a byte from left (high, most significant) to right (low)

Table 11 Bit and Byte order

Name	Meaning
Stopped	only network management service can be executed
Pre-operational	full configuration possible, PDOs are not transmitted
Operational	full configuration possible, PDOs are transmitted

Table 12 CANopen® operation states

NOTE! Please observe that a CAN Identifier (for CANopen® the combination of a CAN Identifier and Node Identifier) always has to be unique!

5.2 Description of the Process Data Object (PDO)

5.2.1 TxPDO

Fixed places are allocated for the measured values. Dynamic mapping is not possible. It is possible to operate the TxPDO mode either cyclic, synchronous or asynchronous. In order to avoid excessive bus usage due to continuous exchanges during not-cyclic transmission (Event-Time = 0), it is possible to set the so-called `Inhibit time` within the CAN menu of the serial monitor. It is, however, possible to transmit a PDO cyclically. In this case, it is necessary to select the Event Time accordingly and also set the Inhibit Time = 0.

It is possible to permanently deactivate a TxPDO by selecting the asynchronous mode (255) with Inhibit-Time = 0, Event_time = 0 and saving the parameters in the interpreter. In addition, it is possible to temporarily deactivate/activate the TxPDO by setting/deleting the highest ranking bit within the corresponding TxPDO COB Identifier [1800,01].

T-PDO_1 is transmitted together with Identifier 0x180 + Node Address. It contains 7 bytes, which include the status as shown in the serial monitor, the deviation in millimeters, the covariance peak value and the 4 digital inputs. The transmission sequence is status, X, peak value, digital inputs and barcode. If no barcode has been decoded so far, the value 255 is used.

Value	Format	Value range	Comment
Status	unsigned 16	0..0xffff	Status bits according to Table 7 on page 35
X1	signed 16	-32768…..+32767	Track deviation within the range of max. -250 [mm] to +250 [mm]
PEAK	unsigned 16	0....65535	Peak value of the covariance function
Dig. In	unsigned 8	0..0x0f	Status of the 4 digital inputs
Code	unsigned 8	0....99	Barcode

Table 13 Variables of TxPDO_1

The synchronous identifier is 0x80. It is possible to read out this parameter under index [1005,00], but it is not possible to change it.

5.2.2 RxPDO

The RxPDO contains the system configuration in two bytes. A dynamic mapping is not designed. The RxPDO operation mode is asynchronous. The RxPDO can be temporarily activated/deactivated by setting/deleting the most significant bit in the COB-identifier [1600,01]. The RxPDO will be received with the Identifier 0x200 + Node-ID.

Value	Format	Range	Remark
Config	unsigned 16	0..0xffff	configuration bits according to Table 36 on page 53

Table 14 Character description of the RxPDO_1

5.3 Heartbeat

The Optical Line Tracker supports the Heartbeat mode. Whenever a Heartbeat time > 0 is set in the CAN menu, the device status is transmitted under identifier (0x700 + Node address) once the heartbeat timer has expired. The guard time is then set to 0.

Node status	Code
stopped	0x04
pre-operational	0x7f
operational	0x05

Table 15 Coding of the Node status

5.4 Node Guarding

When the Heartbeat time is set to 0, the device replies to a Remote Transmission Request on Identifier (0x700 + Node address) with the device status (refer to Table 15 above) in which the highest bit changes. The device does not monitor the periodic reception of the RTR Frames.

5.5 Description of the Service Data Objects (SDOs)

The service data object is used to access to the object index. An SDO is always transmitted with a confirmation, i. e. each reception of a message is acknowledged. The identifiers for read and write access are:

Read access: 0x600 + Node address,

Write access: 0x580 + Node address.

The SDO telegrams are described in the CiA standard DS-301. The error codes in case of faulty communication are listed in the following table:

Name	Number	Description
SDO_ABORT_UNSUPPORTED	0x06010000	non-supported access to an object
SDO_ABORT_READONLY	0x06010001	write access to a read-only object
SDO_ABORT_NOT_EXISTS	0x06020000	object not implemented
SDO_ABORT_TRANSFER	0x08000020	The signature 'load' or 'save' was not used for loading or saving parameters.
SDO_ABORT_PARA_VALUE	0x06090030	Parameter value range exceeded
SDO_ABORT_PARA_TO_HIGH	0x06090031	Parameter value too high

Table 16 Error codes

5.6 Object Index

All objects relevant for the device are included in the CANopen® Object Index. Each entry is indicated by a 16 bit index. Sub-components are indicated by a 8 bit subindex. RO indicates read-only entries.

- Communication parameters are indicated by C in the EEProm column.
- Manufacture parameters are indicated by M in the EEProm column.

The object index is subdivided into the following areas:

5.6.1 Communication specific Entries within the Range of 0x1000 to 0x1FFF

Index	Subindex	Access	Content	EEProm
0x1000	0	RO	Device Type	
0x1001	0	RO	Error Register	
0x1005	0	RO	COB ID Sync Message	
0x1008	0	RO	Device Name	
0x1009	0	RO	Hardware Version	
0x100A	0	RO	Software Version	
0x1010	0	RO	Number of entries of Save Parameter	
	1	RW	Save all	

Table 17 Overview of the object dictionary (part 1 of 2)

Index	Subindex	Access	Content	EEProm
0x1011	0	RO	Number of entries of Restore Default Parameter	
	1	RW	Restore Default all	
	2	RW	Restore Default Communication Parameter	
	3	RW	Restore Default Manufacture Parameter	
0x1017	0	RW	Producer Heartbeat Time	C
0x1018	0	RO	Number of entries of Identity Object	
	1	RO	Vendor ID	
	2	RO	Product Code	
	3	RO	Revision	
	4	RO	Serial Number	
0x1400	0	RO	Number of entries of Receive PDO_1	
	1	RW*	COB-ID	
	2	RO	Transmission Type	
0x1600	0	RO	Number of Objects mapped to Receive PDO_1	
	1	RO	Specification of Appl. Object 1	
0x1800	0	RO	Number of entries of Transmit PDO_1	
	1	RW*	COB-ID	
	2	RW	Transmission Type	C
	3	RW	Inhibit Time	C
	5	RW	Event Time	C
0x1A00	0	RO	Number of Objects mapped to Transmit PDO_1	
	1	RO	Specification of Appl. Object 1	
	2	RO	Specification of Appl. Object 2	
	3	RO	Specification of Appl. Object 3	
	4	RO	Specification of Appl. Object 4	
	5	RO	Specification of Appl. Object 5	
*) Only the most significant bit can be changed in order to deactivate the PDO temporarily.				

Table 17 Overview of the object dictionary (part 2 of 2)

5.6.2 Manufacturer specific Entries starting at 0x2000

Index	Subindex	Access	Content	EEProm
0x2000	0	RO	Number of entries	
	1	RW	Startline	M
	3	RW	Config	M
	4	RW	Threshold_1	M
	5	RW	Threshold_2	M
	6	RW	Track_mm	M
	7	RW	Height_mm	M
	8	RW	Peak_Level	M
	9	RW	Warn_Level	M
	10	RW	Calib_factor	M
	11	RW	SCmin	M
	12	RW	Luminance	M
	13	RW	Contrast	M
	14	RW	Gamma	M
0x2001	0	RO	Number of Parameter	
	1	RW	Node Baudrate	C
	2	RW	Node ID	C

Table 18 Overview object index II

5.6.3 Standardized Device Profile Area from 0x6000

0x6000	0	RO	Number of 8 Bit Digital Inputs
	1	RO	Dig. Inputs
	2	RO	Barcode
0x6100	0	RO	Number of 16 Bit Digital Inputs
	1	RW	System status (R) / delete port error (W)
0x6404	0	RO	Number of 16 Bit analog Inputs
	1	RO	X [mm]
	2	RO	Peak level of Covariance

Table 19 Overview object index III

5.7 CANopen® Directory

5.7.1 Device Type

Index	Sub Index	Name	Format	Attr.	Map	Default	Description
0x1000	00	Device Type	Unsigned 32	RO	No	0x00050191	Digital/analog Inputs - DS 401

Table 20 CANopen® Directory: Device Type

5.7.2 Error Register

Index	Sub Index	Name	Format	Attr.	Map	Default	Description
0x1001	00	Error Register	Unsigned 8	RO	No	0x00	Error Register

Table 21 CANopen® Directory: Error Register

Always 0 (no error)

5.7.3 COB-ID SYNC message

Index	Sub Index	Name	Format	Attr.	Map	Default	Description
0x1005	00	COB-ID SYNC	Unsigned 32	RO	No	0x80000080	Sync Consumer, Sync ID = 0x80

Table 22 CANopen® Directory: COB-ID SYNC message

5.7.4 Device Name

Index	Sub Index	Name	Format	Attr.	Map	Default	Description
0x1008	00	Device Name	Visible string	RO	No	„7384“	Device name: „7384“

Table 23 CANopen® Directory: Device Name

5.7.5 Hardware Version

Index	Sub Index	Name	Format	Attr.	Map	Default	Description
0x1009	00	Hardware Version	Visible_String	R0	No	„0ZA3“	Version number

Table 24 CANopen® Directory: Hardware Version

5.7.6 Software Version

Index	Sub Index	Name	Format	Attr.	Map	Default	Description
0x100A	00	Software Version	Visible_String	R0	No	„2.01“	Version number

Table 25 CANopen® Directory: Software Version

5.7.7 Save Parameter

Index	Sub Index	Name	Format	Attr.	Map	Default	Description
0x1010	00	Save Parameter	Unsigned 8	RO	No	0x01	number of sub indexes
	01	Save All	Unsigned 32	RW	No	0x00000001	Save All is possible

Table 26 CANopen® Directory: Save Parameter

By writing the signature 'save' in ASCII Code (hex-Code: 0x65766173) onto subindex 1, the currently set parameters are permanently saved. A successful recording procedure is acknowledged by an TxSDO (1st Byte = 0x60) after approx. 400 ms. During the saving process it is not possible to transmit or receive CAN telegrams.

5.7.8 Restore Default Parameter

Index	Sub Index	Name	Format	Attr.	Map	Default	Description
0x1011	00	Restore Parameter	Unsigned 8	RO	No	0x03	Number of sub-indexes
	01	Restore All	Unsigned 32	RW	No	0x00000001	Restore All is enabled
	02	Restore Communication	Unsigned 32	RW	No	0x00000001	Restore Communication is possible
	03	Restore Manufacture	Unsigned 32	RW	No	0x00000001	Restore Manufacture is possible

Table 27 CANopen® Directory: Restore Default Parameter

By writing the signature 'load' in ASCII Code (hex-Code: 0x64616F6C) onto subindex 1, 2 or 3, the corresponding default parameters are loaded. A reset should be carried out. In case of 'Restore All', the Node ID is also set to 1 and the baud rate to 125 Kbaud.

5.7.9 Producer Heartbeat Time

Index	Sub Index	Name	Format	Attr.	Map	Default	Description
0x1017	00	Producer Heart-beat Time	Unsigned 16	RW	No	0	Heartbeat time in ms (approx.)

Table 28 CANopen® Directory: Producer Heartbeat Time

In case 0 is set, this function is deactivated.

5.7.10 Identity Object

Index	Sub Index	Name	Format	Attr.	Map	Default	Description
0x1018	00	Identity Object	Unsigned 8	RO	No	0x04	Number of sub indexes
	01	Vendor ID	Unsigned 32	RO	No	0x00000202	Manufacturer number given by CiA
	02	Product Code	Unsigned 32	RO	No	0x00073840	HG Number 73840
	03	Revision	Unsigned 32	RO	No	0x00000100	Version 2.00
	04	Serial Number	Unsigned 32	RO	No	9999999	Serial number

Table 29 CANopen® Directory: Identity Object

5.7.11 Receive PDO_1 Parameter

Index	Sub Index	Name	Format	Attr.	Map	Default	Description
0x1400	00	RxPDO_1 Parameter	Unsigned 8	RO	No	0x02	Number of sub indexes
	01	COB ID	Unsigned 32	RW	No	0x40000200 + Node-ID	RPDO_1 valid, ID = 0x200 + Node-ID
	02	Transmis-sion Type	Unsigned 8	RO	No	255	Asynchronous event control

Table 30 CANopen® Directory: Receive PDO_1 Parameter

5.7.12 Mapping RxPDO_1

Index	Sub Index	Name	Format	Attr.	Map	Default	Description
0x1600	00	Number of mapped objects	Unsigned 8	RO	No	0x01	Number of sub indexes
	01	1st mapped object	Unsigned 32	RO	No	0x20000310	mapped to index 0x2000,03 with 16 Bit length (Config)

Table 31 CANopen® Directory: Mapping RxPDO_1

5.7.13 Transmit PDO_1 Parameter

Index	Sub Index	Name	Format	Attr.	Map	Default	Description
0x1800	00	TxPDO_1 Parameter	Unsigned 8	RO	No	0x05	Number of sub indexes
	01	COB ID	Unsigned 32	RW	No	0x40000180 + Node-ID	TPDO_1 valid, ID = 0x180 + Node-ID
	02	Transmis-sion Type	Unsigned 8	RW	No	255	Asynchronous event-controlled
	03	Inhibit Time	Unsigned 16	RW	No	0	shortest time between trans-mission [µs]
	05	Event Time	Unsigned 16	RW	No	20	cycle time [ms]

Table 32 CANopen® Directory: Transmit PDO_1 Parameter

5.7.14 Mapping TxPDO_1

Index	Sub Index	Name	Format	Attr.	Map	Default	Description
0x1A00	00	Number of mapped objects	Unsigned 8	RO	No	0x05	Number of sub indexes
	01	1st mapped object	Unsigned 32	RO	No	0x61000110	mapped to index 0x6100,01 with 16 bit length (Status)
	02	2nd mapped object	Unsigned 32	RO	No	0x64040110	mapped to index 0x6404,01 with 16 bit length (X)
	03	3rd mapped object	Unsigned 32	RO	No	0x64040210	mapped to index 0x6404,02 with 16 bit length (peak)
	04	4th mapped object	Unsigned 32	RO	No	0x60000108	mapped to index 0x6000,01 with 8 bit length (dig. input)
	05	5th mapped object	Unsigned 8	RO	No	0x60000208	mapped to index 0x6000,02 with 8 bit length (bar-code)

Table 33 CANopen® Directory: Transmit PDO_1 Parameter

5.7.15 Manufacture Parameter

Index	Sub Index	Name	Format	Attr.	Map	Default	Description
0x2000	00	number of parameter	Unsigned 8	RO	No	14	number of sub indexes
	01	Startline	Unsigned 8	RW	No	80	start of picture interpretation in lines
	03	Config	Unsigned 16	RW	No	0xE-0C9	configuration accord. to Table 36 on page 53
	04	Threshold_1	Unsigned 16	RW	No	10	threshold deviation signaling 1
	05	Threshold_2	Unsigned 16	RW	No	15	threshold deviation signaling 2
	06	Track_mm	Unsigned 16	RW	No	24	track width in mm
	07	Height_mm	Unsigned 16	RW	No	100	installation height of camera in mm
	08	Peak_Level	Unsigned 16	RW	No	6000	threshold value for covariance evaluation
	09	Warn_Level	Unsigned 16	RW	No	7000	threshold for track warning
	0A	Calib_factor	Unsigned 16	RW	No	490	calibration for camera
	0B	SCmin	Unsigned 8	RW	No	20	minimal symbol contrast for barcode reading
	0C	Luminance	Unsigned 8	RW	No	50	Luminance / %
	0D	Contrast	Unsigned 8	RW	No	50	Contrast / %
	0E	Gamma	REAL32	RW	No	1.0	Gamma value

Table 34 Manufacture Parameter

5.7.16 Codes for System Configuration (delivered in PDO_1)

Bit Values	Name	Description (if set)
0x0001	AUTOSTART *)	Only CANopen®: Device starts in the mode *operational*
0x0002	CAMSEL **)	Camera input 2 is active
0x0004	WIDTH_CHECK *)	The width of the covariance function will be checked.
0x0008	INVTRACK_1	Evaluation dark track on light ground (Parameter set 1)
0x0010	HOLD_ANA_OUT	See menu (O)utput-Input settings in section 4.5 on page 26 –> (H)old analogue value
0x0020	PARALLEL_IN	Activation of the parallel inputs
0x0040	TURN_RIGHT **)	
0x0080	TURN_LEFT **)	

Turn left	Turn right	Value in con-fig. word	Description
0	0	0x..0.	No release of the analog output
0	1	0x..4.	Turn right
1	0	0x..8.	Turn left
1	1	0x..C.	Straight on

Table 35 Coding of the turning commands

0x0100	SER_CAN	Serial/CAN activation. Can only be changed in the monitor.
0x0200	HILO	Byte sequence for 16 bit variable in TxPDO_1: „High Byte first“
0x0400	EDGE	A track will also be evaluated, if it touches picture edges on the left or right, as long as the covariance maximum does not fall below the threshold value. The bits TURN_RIGHT and TURN_LEFT have to be the same.
0x0800	CODE_OUT	- if set: code output on OUT_1...OUT_4 - if deleted: distance threshold output on OUT_1..OUT_4
0x1000	PARASET	Selection of the parameter set for every camera see Table 4 on page 20
0x2000	INVTRACK_2	From parameter set no. 2: Evaluation dark track on light ground
0x4000	INVTRACK_3	From parameter set no. 3: Evaluation dark track on light ground
0x8000	INVTRACK_4	From parameter set no. 4: Evaluation dark track on light ground

*) Once any of these parameters have been changed, they have to be saved via the function <save all> and afterwards a Node Reset has to be carried out. In this case camera selection and turning information are also permanently saved. However, these values can also be altered dynamically.

**) influences the system only if parallel inputs are disabled

Table 36 CANopen® Directory: Codes for System Configuration (delivered in PDO_1)

5.7.17 Manufacture Parameter - Node Parameter

Index	Sub Index	Name	Format	Attr.	Map	Default	Description
0x2001	00	number of parameter	Unsigned 8	RO	No	0x02	number of sub-indexes
	01	Node Baud-rate	Unsigned 8	RW	No	0x04	125 kbaud according Table 38 bottom
	02	Node ID	Unsigned 8	RW	No	0x01	Node address 1

Table 37 CANopen® Directory: Manufacture Parameter - Node Parameter

Input / output	baudrate / kbaud
7	20
6	50
5	100
4 (Default)	125
3	250
2	500
0	1000

Table 38 Manufacture Parameter - Node Parameter: Coding of baudrate

5.7.18 8 Bit Digital Input (transmitted in TxPDO1)

Index	Sub Index	Name	Format	Attr.	Map	Default	Description
0x6000	00	number of 8 bit inputs	Unsigned 8	RO	No	0x02	Number of 8 Bit Inputs
	01	8 bit digital input	Unsigned 8	RO	Yes	./.	- Upper 4 bits = 0000 - Lower 4 Bits the status of the digital inputs according to Table 40 below
	02	barcode	Unsigned 8	RO	Yes	./.	read barcode 0..99

Table 39 CANopen® Directory: 8 Bit Digital Input (transmitted in TxPDO1)

Digital Input	Bit values within 8 bit Input Byte
IN_1 (TURN RIGHT)	0000.000x
IN_2 (TURN LEFT)	0000.00x0
IN_3 (CAM_SEL)	0000.0x00
IN_4 (PARAMETER_SET)	0000.x000

Table 40 8 Bit Digital Input: Coding of digital inputs

5.7.19 16 Bit Status (transmission in TxPDO 1)

Index	Sub Index	Name	Format	Attr.	Map	Default	Description
0x6100	00	number of 16 bit inputs	Unsigned 8	RO	No	0x01	number of 16 bit inputs
	01	16 bit digital input	Unsigned 16	RW	Yes	./.	System status accord. to Table 7 on page 35 / delete port errors

Table 41 CANopen® Directory: 16 Bit Status (transmission in TxPDO 1)

5.7.20 16 Bit Analog Inputs (transm. in TxPDO 1)

Index	Sub Index	Name	Format	Attr.	Map	Default	Description
0x6404	00	number of 16 bit analog inputs	Unsigned 8	RO	No	0x02	number of the analog 16 bit inputs
	01	X mm	Signed 16	RO	Yes	./.	track deviation
	02	Peak	Unsigned 16	RO	Yes	./.	Peak of the covariance function

Table 42 CANopen® Directory: 16 Bit Analog Inputs (transm. in TxPDO 1)

5.8 EDS Configuration File

Tip! Electronic Data Sheet: The so-called EDS-File is available via the website http://www.goetting-agv.com/components/73840.

6 Serial Interface

At the serial interface the measuring values (see Table 43 on page 56) and the steering order (s. Table 46 on page 57) will be transmitted to the host. The steering via the parallel input should be deactivated. The switch-off occurs in the menu (O)utput-Input Settings (see section 4.5 on page 26). The sequence of Hi- and Lo-bytes can be changed in the menu.

6.1 Telegram Structure (Optical Line Tracker -> Host)

In this case it will be a binary telegram with a fixed starting sign, 8 bytes data and a check sum.

#	Sign	Description	Format	Range
1	STX	Starting sign	Unsigned char	$0x02_h$
2	Status (Hi)	Status bits according to Table 45 below	Unsigned int	$0x0000_h$ … $0xFFFF_h$
3	Status (Lo)			
4	X (Hi)	Track deviation in the area ± 250 [mm]	Signed int	-32768…..+32767
5	X (Lo)			
6	Peak (Hi)	Peak value of the covariance function	Unsigned int	0 65535
7	Peak (Lo)			
8	Dig. In	Status of the 4 digital inputs	Unsigned char	$0x00_h$ …. $0x0F_h$
9	Barcode	Last read barcode	Unsigned char	$0x00_h$ ..... $0x99_h$ (BCD)
10	Check sum	The hexadecimal (Modulo-8) sum of the signs 2 to 10 will be 0		

Table 43 Content of the sent telegrams

The description of the status bits:

Rating	Meaning if deleted	Meaning if set
0x0001	EEProm parameter accurate	Mistake in EEProm of parameter set
0x0002	parallel output ok	parallel output short-circuit
0x0004	No further track to the left	Further track to the left is found
0x0008	No further track to the right	Further track to the right is found
0x0010 (IN1) 0x0020 (IN2)		

IN1	IN2	Rating of the status	Description
0	0	0x..0.	No approval of the analog output
1	0	0x..1.	Turn right
0	1	0x..2.	Turn left
1	1	0x..3.	Straight on

Table 44 Coding of the inputs IN1 and IN2

0x0040	Camera 1 active	Camera 2 active
0x0080	Parameter set 1 or 3 active	Parameter set 2 or 4 active

Table 45 Description of the status bits (part 1 of 2)

Rating	Meaning if deleted	Meaning if set
0x0100	Distance signal < threshold 2 right	Distance signal > threshold 2 right
0x0200	Distance signal < threshold 1 right	Distance signal > threshold 1 rights
0x0400	Distance signal > -threshold 1 left	Distance signal < -threshold 1 left
0x0800	Distance signal > -threshold 2 left	Distance signal < -threshold 2 left
0x1000	No bar code	Bar code is decoded
0x2000	Track quality good	Track quality bad
0x4000	No track recognized	Track recognized
0x8000	Toggles after each transmitted telegram	

Table 45 Description of the status bits (part 2 of 2)

6.2 Telegram Structure (Host -> Optical line tracker)

In this case it will be a binary telegram with a fixed starting sign, 2 bytes data and a checking sum.

#	Sign	Description	Data type	Range
1	STX	Starting sign	Unsigned char	$0x02_h$
2	Config (Hi)	configuration bits according to Table 48 below	Unsigned int	$0x0000_h$ … $0xFFFF_h$
3	Config (Lo)			
4	Parity	The hexadecimal (Modulo-8) sum of all signs 2 to 4 will be 0		

Table 46 Content of the received telegrams

The description of the configuration bits is determined of the following table:

Rating	Name	Description if set
0x0001	AUTOSTART	Only CANopen®: Device starts in mode *operational*
0x0002	CAMSEL	Camera-input 2 is active if set (see Table 49 on page 58)
0x0004	WIDTH_CHECK	The width of the covariance function will be checked
0x0008	INVTRACK_1	Evaluation of dark track on light ground (parameter set 1)
0x0010	HOLD_ANA_OUT	See menu (O)utput-Input settings (section 4.5 on page 26): (H)old analogue value
0x0020	PARALLEL_IN	Activation of the parallel inputs

Table 48 Description of the configuration bits (part 1 of 2)

<table>
<tr><th>Rating</th><th>Name</th><th>Description if set</th></tr>
<tr><td>0x0040</td><td>TURN_RIGHT</td><td rowspan="2">
<table>
<tr><th>Turn Left</th><th>Turn Right</th><th>Rating in the config. word</th><th>Description</th></tr>
<tr><td>0</td><td>0</td><td>0x..0.</td><td>No approval of the analog output</td></tr>
<tr><td>0</td><td>1</td><td>0x..4.</td><td>Turn right</td></tr>
<tr><td>1</td><td>0</td><td>0x..8.</td><td>Turn left</td></tr>
<tr><td>1</td><td>1</td><td>0x..C.</td><td>Straight on</td></tr>
</table>
Table 47 Coding of the turning commands
</td></tr>
<tr><td>0x0080</td><td>TURN_LEFT</td></tr>
<tr><td>0x0100</td><td>SER_CAN</td><td>Serial/CAN activation. Can only be changed in the monitor</td></tr>
<tr><td>0x0200</td><td>HILO</td><td>High-byte of the more byte values will be transmitted first</td></tr>
<tr><td>0x0400</td><td>EDGE</td><td>If set a track will also be evaluated, in case it touches the picture edges on the right or left, as long as covariance maximum the adjusted threshold is undercut. The bits TURN_RIGHT and TURN_LEFT have to be the same.</td></tr>
<tr><td>0x0800</td><td>CODE_OUT</td><td>Barcode will be output via OUT1 to OUT4</td></tr>
<tr><td>0x1000</td><td>PARASET</td><td>Selection of the parameter set for each camera (see Table 49 on page 58)</td></tr>
<tr><td>0x2000</td><td>INVTRACK_2</td><td>Analysis of dark track on light ground (parameter set 2)</td></tr>
<tr><td>0x4000</td><td>INVTRACK_3</td><td>Analysis of dark track on light ground (parameter set 3)</td></tr>
<tr><td>0x8000</td><td>INVTRACK_4</td><td>Analysis of dark track on light ground (parameter set 4)</td></tr>
</table>

Table 48 Description of the configuration bits (part 2 of 2)

The allocation of the four parameter sets to the bits PARASET and CAMSEL and the digital inputs is as follows:

Input		
CAMSEL (IN3)	**PARASET (IN4)**	**Active Parameter set No.**
0 (Camera1 active)	0	1
0 (Camera1 active)	1	2
1 (Camera 2 active)	0	3
1 (Camera 2 active)	1	4

Table 49 Allocation of the parameter sets

7 Troubleshooting

The following table contains a list of errors that might occur. For each error, a symptom description is given. In the third column you will find a description of how to locate and possibly correct the error.

If you should not be able to correct an occurring error, please use the table to locate the source of the error as exactly as possible (nature of malfunction, at which point of time did the error occur, etc.) before consulting us.

Issue	Possible Cause(s)	Diagnosis/Correction
No system function	Supply voltage is not sufficient	Check the operation voltage
No contact / connection possible, output of incomprehensible characters	Wrong transmission parameters	1. Check the corresponding connections 2. Select 38400 Bd, 8 bit, even parity, no handshake.
Output values not repeatable, insufficient accuracy, instable image on control monitor	Interferences	Cable laying in close proximity to strong interference currents can cause image interferences (distortion). Use shielded lines and cable chokes.
No reaction to modified parallel input	Parallel input not activated	Activate the parallel inputs in the menu Output Input Settings, see section 4.5 on page 26
The analog output does not correspond to track modifications	Output not activated	While the parallel interface is activated switch the inputs IN_1 and IN_2 according to Table 3 on page 17
Lost of track	- Track has disruptions - External radiation - Dark picture content is reflected - Contrast between the track and the background is too low.	- Repair track - Number of tolerated pictures (à 20 ms) with loss of track has to be set up (see 4.5 on page 26) - Shield from external light - Black track / black background have to be non-reflective - Luminance- and contrast settings have to be changed (see 4.4 on page 24)
Wrong turning at branch-offs	The turning bits are not set correctly, the „straight on exit“ leads to a random attitude at the branch-off	A too low contrast on the picture edge can be balanced out with the contrast settings (see 4.4 on page 24)

Table 50 Troubleshooting

8 Technical Data

8.1 Optical Line Tracker

Dimensions		refer to Figure 6 on page 15
Cameras		2 camera systems are alternatively available, Composite Video, Signal 1 V_{PP} at 75 ohm Switchover time: 300 ms (switch-on / switchover)
Interfaces		
	CAN-Bus	not electrically isolated CANopen®, Device Profile DS 401 Node ID and transmission rate via serial interface or SDOs can be configured terminal resistance is not integrated
	serial	not potentially separated - baud rate: 9600, 19200, 38400, 57600 - parity: O, E, N - stop bits: 1, 2
	digital ON	inactive for Uin < 9 V active for Uin > 15 V -30 V < Uin < +30 V, Ri > 3300 Ohm
	digital OFF	Ri ~ 0,4 Ohm Ua ~ Ub for active Ua < 1,5 V for inactive Ia < 0,7 A per channel, short circuit resistant
	Analog output	not electrically isolated, short circuit resistant ±10 V max. ±1 mA
	Monitor serial	38400 baud, 8 data bits, even parity, 1 stop bit, not electrically insulated
	Accuracy	refer to Figure 26 on page 62
Update rate		20 ms
Operating voltage		
	optical line tracker	18 V .. 30 V, 130 mA @ 24 V (without camera)
	Camera	+12 V to 0,3 A
Temperature range		-20° C to +50° C
International Protection Class		IP20

Table 51 Technical Data Optical Line Tracker

8.2 Ordering Information

The following optional components are available from Götting KG:

Component		Ordering number
Camera		HG 73841ZB
Phoenix Connector		
	20-pin	HW CON 00041
	14-pin	HW CON 00042

Table 52 Ordering Information

9 Appendix

A Accuracy

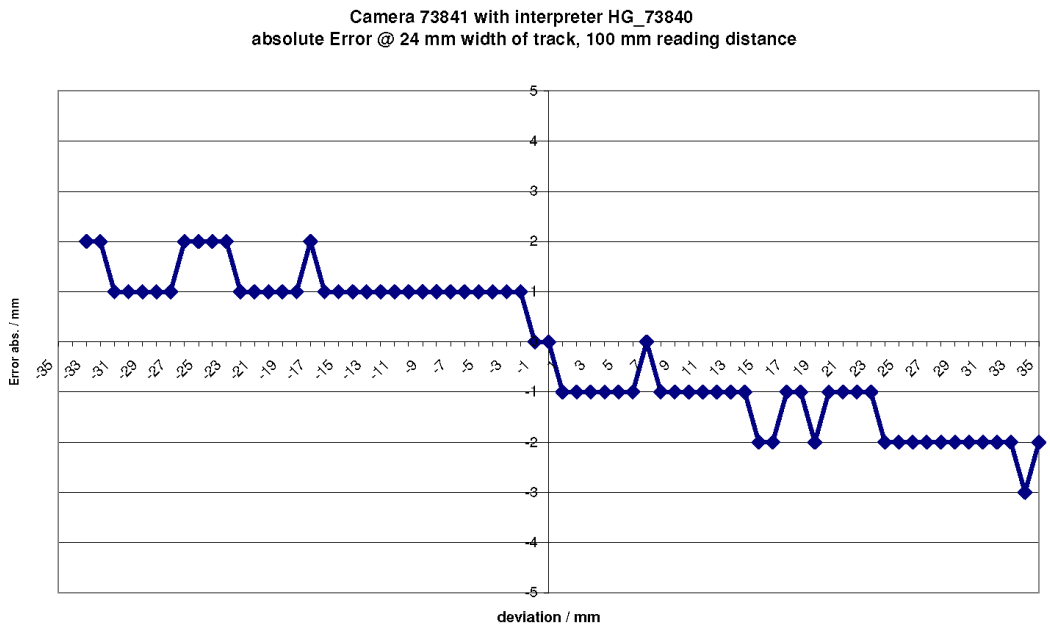

Figure 26 Accuracy

10 List of Figures

11 List of Tables

List of Tables

12 Index

13 Handbook Conventions

At the time this manual was printed, the following symbols and marks were used in all Götting KG documentations:

- For security advices, the following symbols stand for different degrees of danger and importance:

NOTE!

ATTENTION!

WARNING!

- Further information or advices are indicated as follows:

TIP!

- Program texts and variables are indicated through the use of the `Script Courier`.
- Whenever the pressing of letter keys is required for program entries, the required Letter Keys are indicated as such (for any programs of Götting KG small and capital letters are equally valid).
- Sections, drawings and tables are subsequential numbers throughout the complete document. In addition, each documents includes a list of contents showing the page numbers following the front. If a document exceeds 10 pages, it also has a drawings list and a list of tables on the last few pages. If required, in case a document is correspondingly long and complex, a index is added in the back.
- Each document shows a small table including meta information, such as deveopler, author, revision and date of issue, on the front page. The information regarding revision and date of issue are also included in the bottom line on each page of the document. This way it is possible to clear identify the source document for each bit of information.
- Online version (PDF) and printed handbook are always generated from the same source. Due to the consequent use of Adobe FrameMaker for these documentations, it is possible to use the cross hints and content entries (including page numbers of the index) of the PDF file for automatical transfer to the corresponding content.

14 Copyright and Terms of Liability

14.1 Copyright

This manual is protected by copyright. All rights reserved. Violations are subject to penal legislation of the Copyright.

14.2 Exclusion of Liability

Any information given is to be understood as system description only, but is not to be taken as guaranteed features. Any values are reference values. The product characteristics are only valid if the devices/systems are used according to this documentation/the intended use.

This instruction manual has been composed to the best of our knowledge. Installation, setup and operation of the device will be on the customer's own risk. Liability for consequential defects is excluded. We reserve the right for changes to achieve technical improvements. We also reserve the right to change the contents of this manual without having to give notice to any third party.

14.3 Trade Marks and Company Names

Unless stated otherwise, the herein mentioned logos and product names are legally protected trade marks of Götting KG. All third party product or company names may be trade marks or registered trade marks of the corresponding companies.