Device Description HG G-19600ZA

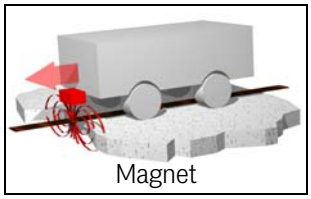

Magnet Sensor

HG G-19600ZA

Track Guidance along Magnetic Tape

English, Revision 01	Date: 26.10.2017	Dev. by: TE	Author(s): RAD / GW

GÖTTING

Innovation through Guidance

www.goetting-agv.com

Summary

Characteristics of the magnet sensor HG G-19600ZA:

• Indoor / IP 54 • Digital magnetometer technology, robust and maintenance free • For axially polarized magnetic tape (widths 50 mm), reading distance 60 mm • Magnetic band easy to install • Detection of the magnetic tape not influenced by dirt on the track • Display of the system status via 5 LEDs	• Three independent detection systems for the recognition of turnoffs • Turnoffs in the track can be selected via digital inputs • Analog outputs: Flux density Z (0 ... 10 VDC), flux density X (-10 ... +10 VDC) • Digital output: Detection of a magnetic tape in the reading area (+24 VDC, max. 20 mA) • Avoid strong magnetic fields close to the sensor, see section 3.2.1 on page 12

The Götting KG in D-31275 Lehrte has a certified quality management system according to ISO 9001.

Contents

1 About this Document

1.1 Function

This device description contains information regarding the correct mounting, electric installation, commissioning and maintenance of the magnet sensor HG G-19600ZA for the technical personnel of a manufacturer who wants to integrate the magnet sensor into an automated guided vehicle (AGV).

This device description does not contain information regarding the usage of the superordinate system, e.g. the automated guided vehicle (AGV). For this information consult the documentation of the vehicle manufacturer resp. the operator of a facility.

This device description applies to devices with firmware version V0.40 and higher (see Figure 13 on page 22 on how to detect which firmware version your device has).

1.2 Symbols

The following symbols and formatting are used in Götting documentations:

Note

Indicates technical information that should be followed when using the device.

ATTENTION!

Indicates dangers that may lead to damages or the destruction of the device.

BEWARE!

Indicates dangers that may lead to injuries or severe damage of property.

WARNING!

Indicates dangers that may lead to injuries, potentially with loss of life, or severe damage of property.

Tip

Indicates information that makes handling of the device easier.

Link

Indicates additional information in the internet, e.g. on our homepage www.goetting-agv.com. Those links are clickable in the PDF version of this documentation.

- Program texts and variables are indicated through the use of `a fixed width font`.
- Whenever the pressing of letter keys is required for program entries, the required Letter Keys are indicated as such (for any programs of Götting KG small and capital letters are equally valid).

2 Introduction

2.1 Range of Use

- The magnet sensor is intended for indoor usage.
- On the surface of the track roadway compatible magnetic tape is layed. Alternatively a magnetic bar can be embedded into the roadway (see section 3.1 on page 11).
- The magnetic sensor is installed so that its underside faces the roadway and meets the nominal reading distance towards the surface of the magnetic tape (see section 3.2 on page 12).

2.2 Qualification of the Users

The personnel intended to operate the magnetic sensor

- has been provided with this documentation.
- is familiar with the functionality of the magnetic sensor.
- is trained sufficiently in mounting and configuring the magnet sensor and qualified to perform those tasks.
- knows the risks posed by driverless vehicles and is trained in the necessary safety precautions to assess the safe operational state of the system.

All personnel in the area of influence of the magnetic sensor is instructed regarding the kind of the vehicle and the risks resulting from the driverless operation.

2.3 Intended Use

The magnet sensor HG G-19600ZA is intended for the track guidance of automated guided vehicles (AGV) along magnetic tape. The sensor detects the magnetic field above magnetic tape in vertical and horizontal direction and thus continually determines the actual deviation from the center of the track (center of the magnetic tape). The deviation is output as analog voltages.

WARNING!

The magnet sensor does not contain functionality to detect obstacles or persons in front of a vehicle! The vehicle manufacturer has to include suitable safety equipment.

BEWARE!

Interferences as specified in section 3.2 on page 12 may lead to inaccurate outputs whereby the vehicle may leave the track. The vehicle manufacturer has to include functionality to detect this and stop the vehicle if needed. As an aid the digital output DOUT1 track detect can be used, see section 5.2.2 on page 19.

Note

In case the magnetic sensor is used for other purposes than specified above or is modified all warranties against the Götting KG are null and void.

The magnet sensor is only used according to section 2.1 on page 7. The magnet sensor is only mounted, configured, commissioned, operated, maintained and dismounted by personnel according to section 2.2 on page 7.

2.4 Functional Principle

The sensor is based on digital magnetometer technology for the detection of the magnetic field above the magnetic tape.

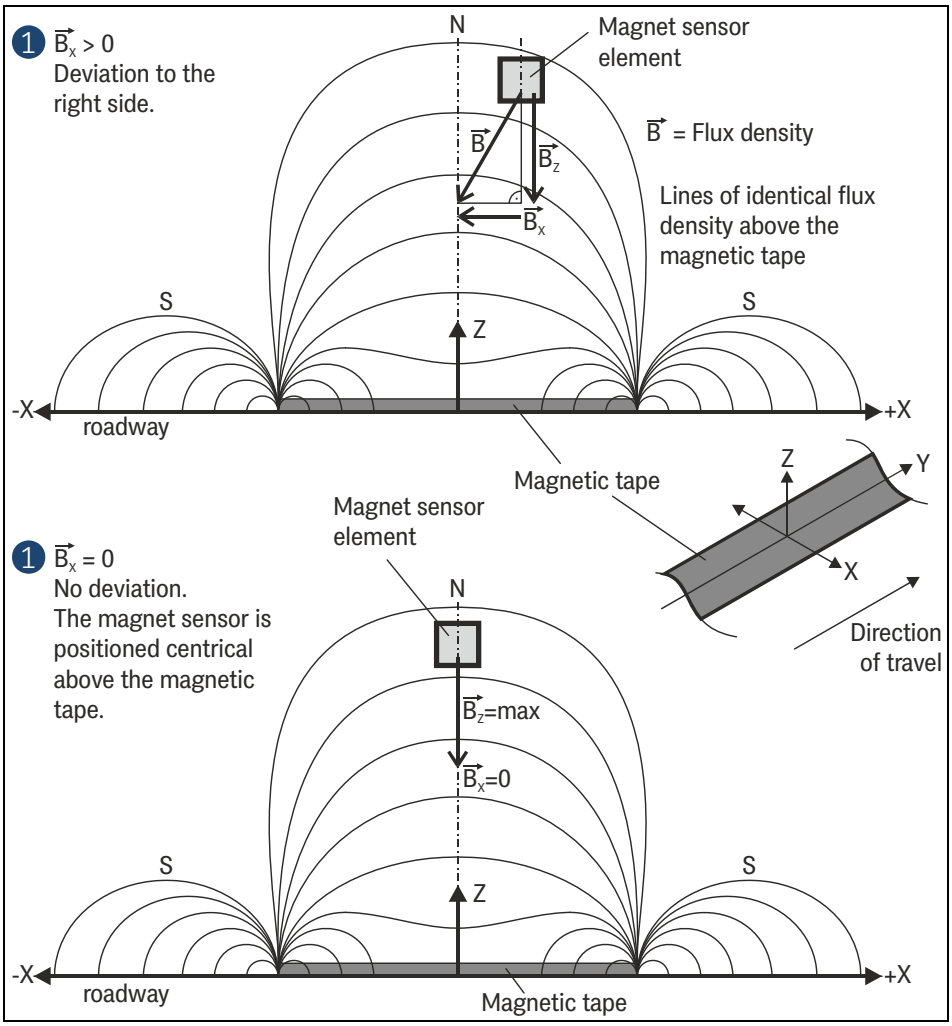

Figure 1 *Detection of the magnetic field*

The sensor has three independent detection systems. Via two digital inputs one of two tracks can be chosen dynamically. Thus the sensor can detect junctions and follow turnoffs (also see 5.3 on page 20).

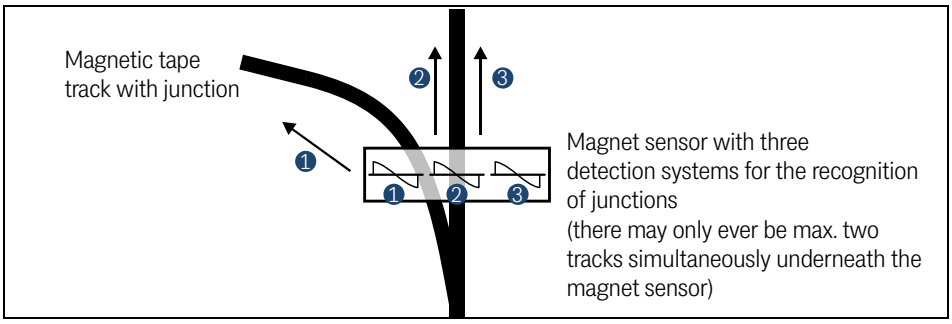

Figure 2 *Three detection systems for the recognition of junctions*

Five LEDs show the operational state (PWR), error state (ERR) and a detected track underneath the independent systems (TR1, TR2, TR3).

Via two analog outputs the deviation from the track and the actual level of the magnetic field are output. Additionally a detect signal is generated when a magnetic tape is detected underneath the sensor.

The detection range depends on the mounting height of the sensor and the type of the magnetic tape. As shown in Figure 1 above the sensor detects the deviation X from the center of the track by measuring the horizontal magnetic flux density. The higher the deviation the higher the output analog voltage.

Figure 3 shows the signals of the outputs (AOUT 1, AOUT 2, Detect) when moving the sensor in X direction above the magnetic tape (crosswise to the direction of travel).

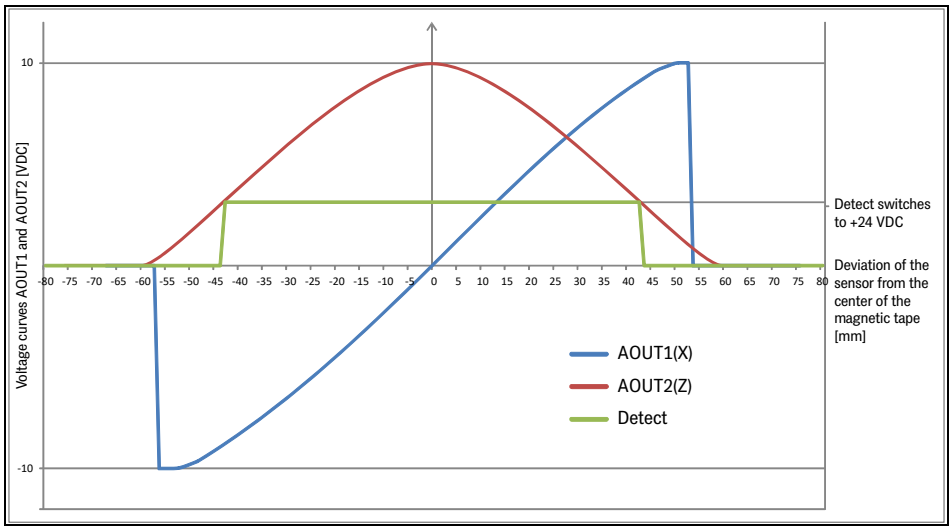

Figure 3 *Voltage curves of the analog outputs (idealized diagram)*

3 Mounting

3.1 Magnetic Tape

For the operation of the magnet sensor HG G-19600ZA axially polarized magnetic band is to be used. The direction of the polarization can be configured s. Figure 17 on page 25). The polarization has to be identical for a whole facility.

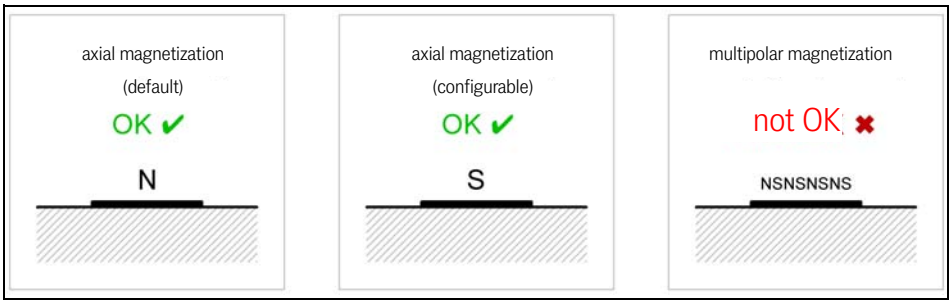

Figure 4 *Supported and unsupported magnetization of the magnetic tape*

3.1.1 Magnetic Tape Types

Götting offers suitable magnetic tapes. Magnetic tape is sticked to the ground. Alternatively embedded magnetic bar can be used that is layed in a groove cut into the ground. Götting magnetic tapes always have the north pole on the top. The following elements are available:

Order no.	Description	Notes
HW MAT00003	Magnetic tape, self-adhesive, on a roll W x H 50 x approx. 1,2 mm	Roll, length 15.2 m
HW MAT00004	Embedded magnetic bar, W X H 6 x 10 mm	quote length
HW MAT00005	Magnetic tape, self-adhesive curve segment 30^0 segment of circle, radius 600 mm	Curve segments
HW MAT00006	Magnetic tape, self-adhesive curve segment 30^0 segment of circle, radius 800 mm	
HW MAT00007	Magnetic tape, self-adhesive curve segment 30^0 segment of circle, radius 1,000 mm	
HW MAT00008	Magnetic junction, branch to the right, self-adhesive, radius 1,000 mm	Junction segments
HW MAT00009	Magnetic junction, branch to the left, self-adhesive, radius 1,000 mm	

Table 1 *Order numbers magnetic tape*

3.1.2 Magnetic Tape Installation

The installation of both the magnetic tape and the embedded magnetic bar is specified in a separately available document that you can download at the following address:

Link

http://goetting-agv.com/components/19600

3.2 Magnet Sensor

3.2.1 Requirements

ATTENTION!

Additional magnetic fields close to the magnet sensor can affect the system characteristics!

External magnetic fields with a field strength below the Earth's magnetic field do not influence the magnet sensor. For stronger fields the strength and position of the field determine whether the magnet sensor is affected or can even be configured to compensate the influence. Fields that asymmetrically influence from a certain direction (left or right) or only occur at certain points of the course are harder to compensate. Generally interferences should be minimized so that the magnet sensor can detect the track reliably. Therefore:

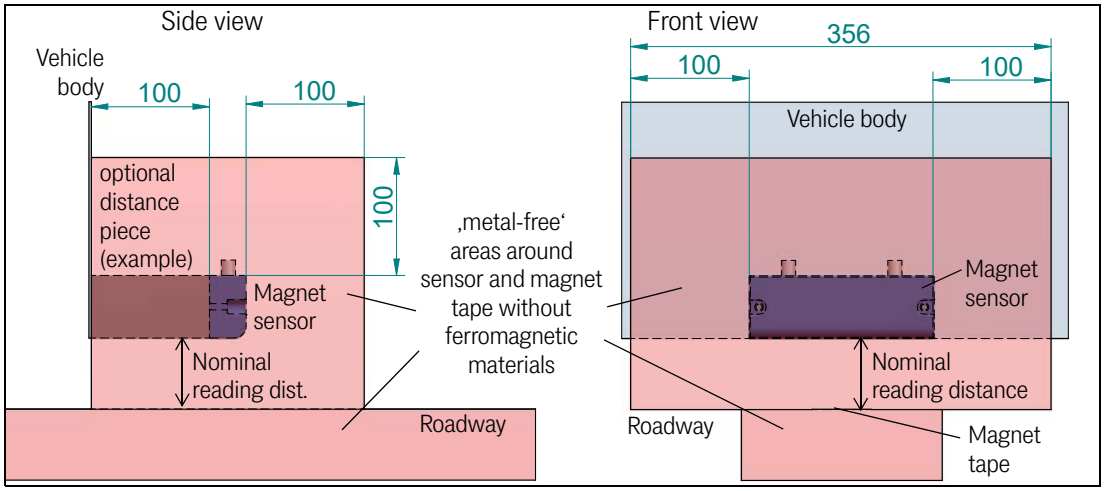

Figure 5 *Areas around sensor and tape that need to be free of ferromagnetic materials*

- An area of 100 mm around the sensor should be free of ferromagnetic materials. Those divert the magnetic field and distort the readings. Similarly an area with a diameter of approximately the nominal reading height around the magnetic tape should be free of ferromagnetic materials.
- Around the sensor and the magnetic tape there may be no additional magnetic fields (permanent magnets, electromagnets, electrical wires, etc.). How much the readings are disturbed by interferences depends on the field strength.
- Electric motors have to be sufficiently shielded.

Tip

Interferences from the vehicle occur permanently, interferences along the track temporarily. Permanent interferences can sometimes be compensated with offsets (see 6.4.2 on page 25), interferences along the track have to be avoided e.g. by moving the magnetic track or by shielding the source.

3.2.2 Mounting on the Vehicle

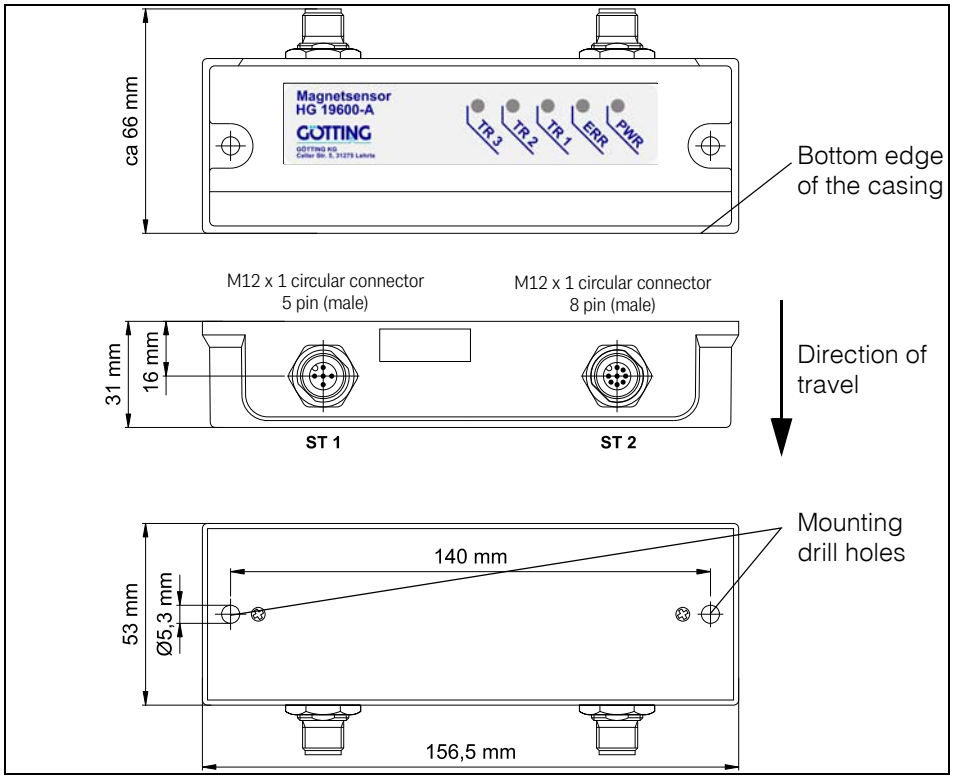

Figure 6 *Casing dimensions and mounting drill holes of the magnet sensor*

The magnet sensor has two drill holes with a diameter of 5 mm each with which it can be mounted by putting screws through the holes. **We recommend the usage of non-magnetizable VA screws.** The drill holes have a distance of 140 mm to each other (center of hole <—> center of hole). The magnet sensor is to be mounted diagonally to the direction of travel with the connectors facing upwards (first sketch in Figure 6 above). The recommended reading height is 60 mm from the bottom edge of the casing to the magnetic tape.

Note

Around the sensor there has to be an area free of ferromagnetic materials. Thus the sensor usually can't be mounted directly onto the body of the vehicle. We recommend using a mounting bracket or mounting plate, e.g. made from Aluminium or acrylic glass (e.g. Plexiglas®), see Figure 7 below.

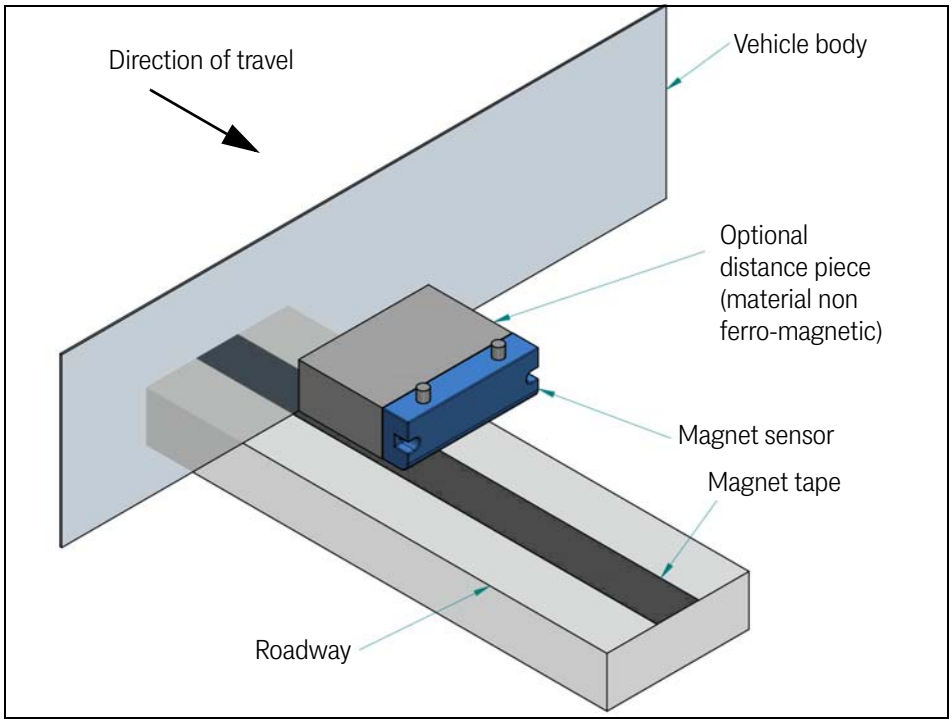

Figure 7 *Possible mounting pos. for the magnet sensor when using an optional distance piece*

Tip

If the magnet sensor has to be mounted side-inverted (aka backwards) the output voltages for the left and right deviations may be interchanged compared to what the vehicle control expects. In this case the output voltage AOUT1 can be inverted inside the sensor, see 6.4.2 on page 25.

3.2.3 Connection Cable (assembled on one side)

Connect the sensor to the vehicle control. For this the connectors ST 1 and ST 2 are used. The assignment of the pins is shown in section 5.2 on page 19. The following optional cable extensions can be used.

Order no.	Description
HW CAB00001	Cable PUR, 5m with one M12 angle coupling, 5 pin, A coded, one end open
HW CAB00007	Cable PUR, 5m with M12 angle coupling, 8 pin, A coded, one end open

Table 2 *Accessories / cable extensions*

4 Commissioning

The sensor is pre-configured to detect a single track without turnoffs. For this application it may be sufficient to install the sensor and connect it to the vehicle control. We recommend to always connect it to a PC and configure it as shown below to minimize interferences. If more than one track is to be detected and if there are turnoffs in the driving course then the configuration as shown below has to be performed.

For the commissioning configuration the serial interface in connector ST 1 is used. Connect ST 1 to a PC as shown in section 6.2 on page 21. Then start a compatible terminal program with ANSI emulation (see section 6.3 on page 21). Then you can use the service program that runs inside the magnet sensor (section 6.4 on page 22).

Note

For the following explanations we assume that your sensor is running with its default configuration. If needed the default settings can be restored in the *settings* menu, see section 6.4.2 on page 25.

The goal of the configuration is the reliable recognition of magnetic tracks. For this the thresholds for the detection of one (resp. two) tracks have to be adjusted. The detection of two tracks is necessary if there are to be junctions in the track. A track is detected when the magnetic flux density is above the set threshold. The track detection has an internal switching delay of 2 % so that it does not react too sensitively in border areas. For the commissioning the following menus and subitems of the service program are used:

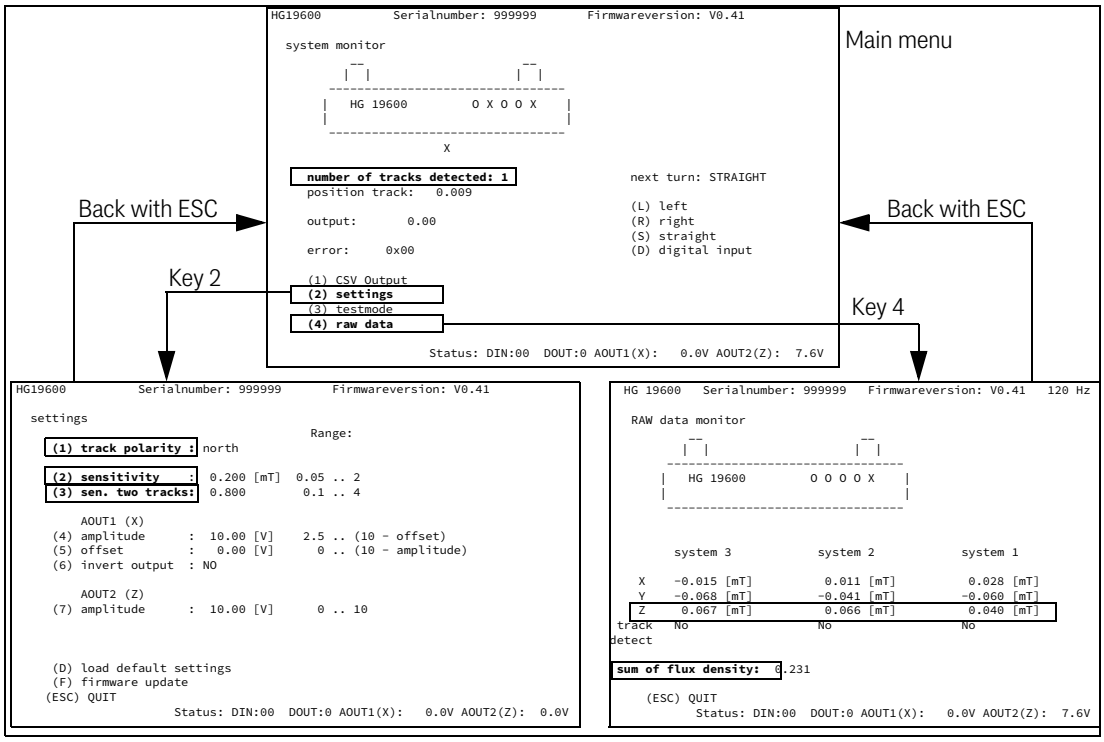

Figure 8 *Commissioning: Menus of the service program*

Meaning of the highlighted parameters:

- number of tracks detected in main menu: Number of detected tracks underneath the sensor (max. 2 at once)
- track polarity in settings menu: Polarity of the magnetic tape
- sensitivity in settings menu: Sensitivity of the detection of a magnetic track, threshold value in milliTesla (mT)
- sen. two tracks in settings menu: Sensitivity of the detection of two magnetic tracks. For applications without junctions set to maximum value (4).
- sum of flux density in raw data menu: Flux density of a magnetic tape underneath the sensor

Tip

When using one of the magnetic tapes listed in section 3.1.1 on page 11 (HW MAT00003, HW MAT00008 and HW MAT00009) the threshold sen. two tracks for two magnetic tracks can be set according to the following table:

Reading height [mm]	50	60	70	80	90	100
sen. two tracks [mT]	0.8	0.64	0.5	0.4	0.32	0.275

Table 3 *Thresholds for two magnetic tracks with standard magnetic tapes*

If there are problems detecting the track or when the working conditions are different we recommend the following configuration sequence:

1. Configure the polarity of the magnetic tape (track polarity in settings menu). Default for Götting magnetic tape or embedded magnetic bar: North.
2. Place the sensor centered above a piece of the used magnetic tape (default reading height 60 mm). The piece should be long enough so that at least 10 cm protrude behind and in front of the sensor.
3. Switch to the menu raw data and write the shown sum of flux density down. Then switch to the settings menu and configure sensitivity to be approx. one fifth of the sum of flux density.
4. Switch to the main menu and move the sensor diagonally to the magnetic tape. Check that the track is reliably detected even when it reaches the lateral edges of the magnet sensor. Optionally the sensitivity in the settings menu has to be reduced if the track is not detected in the border areas.
5. If the turnoff function is to be used the threshold sen. two tracks has to be configured. Table 3 above shows typical values when Götting magnetic tape is used. Typically the threshold for the detection of two tracks is about three times the value for one track. If the turnoff function is not needed (because there are no junctions in the track) sen. two tracks should be set to its maximum value of 4. A good starting point for the threshold for detection of two tracks is three times the limit for one track.
6. In order to test the threshold for two tracks place two pieces of magnetic tape underneath the sensor so that the left edge of the left tape should be directly underneath the left edge of the sensor, the right edge of the right tape should match the right edge of the sensor. Now when the digital inputs are switched (left, right, straight; via the vehicle control, see 5.2.3 on page 20, or via the manual controls in the main menu of the service program, see Figure 13 on page 22) two magnetic tapes should be detected (number of tracks detected in the main menu = 2).

5 Hardware

5.1 LEDs

There are 5 LEDs to control the sensor‘s function.

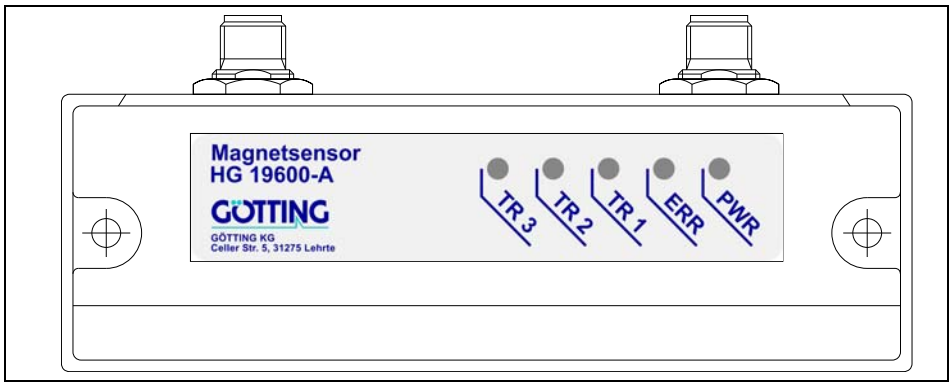

Figure 9 *Positions of the LEDs*

LED	Meaning
PWR	blinks during normal operation
ERR	blinks if errors occur; error codes see Table 5 below
TR 1	Threshold left system exceeded
TR 2	Threshold center system exceeded
TR 3	Threshold right system exceeded

Table 4 *Meaning of the LEDs*

TR3	TR2	TR1	Error code *)	Error description	Possible correction
off	off	on	0x01	– sensor overloaded – magnetic field too strong	– remove magnetic interference source – sensor mounted too low
off	on	off	0x02	System error	Please contact the Götting service department
on	off	off	0x04		
*) Errors can occur simultaneously, then the error codes in the output of the service program are summed up.					

Table 5 *Output of error codes via the LEDs / possible correction*

5.2 Pin Assignment

The magnet sensor has two electrical connectors. The 8 pin connector ST 2 carries all signals that are necessary for operating the sensor. The 5 pin connector ST 1 is used for configuration, diagnosis and software updates. This connector should be accessible or extende to an accessible place (for possible connection cables see section 3.2.3 on page 14). Both connectors can alternatively be used to supply power to the sensor. The pins for supply voltage and supply GND are plated-through, thus if both connectors are to be connected to supply voltage at once the supply voltage has to come from the same source.

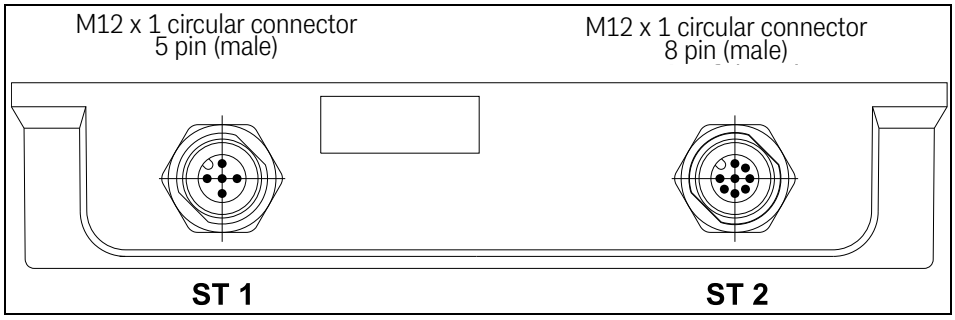

Figure 10 *Positions of the connectors*

5.2.1 ST 1 Service / Configuration

5 pin M 12 panel connector (A coded)

ST 1	Pin	Signal	Annotation
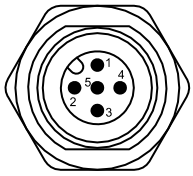	1	+Ub (24V)	supply voltage (plated-through to ST 2 Pin 1)
	2	—	n.c.
	3	TxD	RS232 data output
	4	RxD	RS232 data input
	5	GND	supply GND (plated-through to ST 2 Pin 5)

Table 6 *Pin assignment ST 1 5 pin*

5.2.2 ST 2 Operation

8 pin M 12 panel connector (A coded)

ST 2	Pin	Signal	Annotation
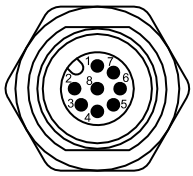	1	+Ub (24V)	supply voltage
	2	GND	supply GND
	3	DIN 1	digital inputs: Turnoff selection, s. 5.3 on page 20
	4	DIN 2	
	5	AOUT 1 (X) *)	analog outputs: Outputs track guidance
	6	AOUT 2 (Z) *)	
	7	DOUT1 (max. 20mA)	digital Detect output: Output track detected +Ub (24V)
	8	n.c.	
*) Voltage range configurable (see section 6.4.2 on page 25)			

Table 7 *Pin assignment ST 2 8 pin*

5.2.3 Digital Inputs Turnoff Selection

Via the two digital inputs in connector ST 2 it is possible to dynamically select one of three tracks (left, center, right), also see section 5.3 below.

DIN 1	DIN 2	Track
1	0	Left
0	1	Right
0	0	Straight
1	1	Straight

Table 8 *Turnoff selection via digital inputs DIN 1 and DIN 2*

5.3 Turning off from the Main Track

If the vehicle is to turnoff to a second track the second track has to be started as shown in Figure 11. Suitable magnetic tape for turnoffs is listed in Table 1 on page 11. In addition to the main track there may only ever be one branch track in the reading area of the sensor. Crossroads thus have to be realized with the left turnoff and the right turnoff having an offset.

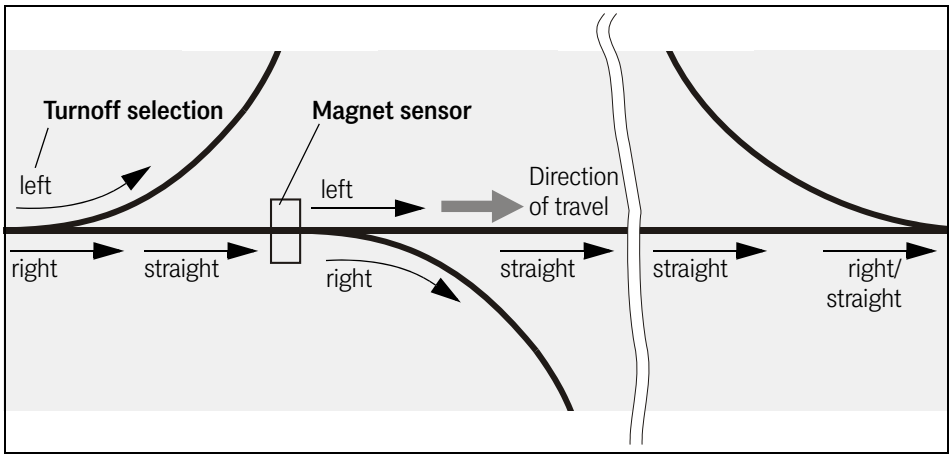

Figure 11 *Layout of turnoffs*

The sensor receives the turnoff commands via its digital inputs (see above) or via the main menu of the service program (for testing purposes, see 6.4 on page 22). The command has to be sent before the sensor detects the second track. It should be reset shortly after the turnoff. Due to optimized algorithms the magnet sensor stays centered over the chosen track during turnoffs.

ATTENTION!

If at a junction the digital input is set to *straight* the behavior of the track guidance is random!

As shown in Figure 11 at turnoffs the direction should either be set to the direction of the turnoff or the opposite direction. Since there is no turnoff in the opposite direction the sensor then steers the vehicle straight on.

6 Software

6.1 Switch-On Behavior

Directly after switch-on all 5 LEDs are lit. The boot loader then waits for 5 seconds if a software update is to be carried out. Afterwards the sensor switches to its normal operating mode.

6.2 Connection to a PC via the Serial Interface

The sensor has a serial interface included in the 5 pin ST 1 (s. 5.2.1 on page 19). This interface can be used for its diagnosis, configuration or a software update. A PC with a serial RS 232 interface is needed. For PCs that don‘t have a serial interface a USB to RS 232 adapter can be ordered from electronics retailers.

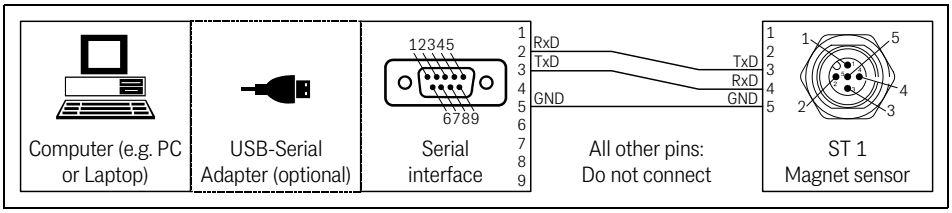

Figure 12 *Connection example: Connection with the serial interface of a computer*

The sensor‘s serial interface has the following communication settings. Those have to be configured in the terminal program on the PS (see below).

Setting	
Bits per second	115200
Data bits	8
Parity	None
Stop bits	1
Flow control	None
Terminal emulation	ANSI

Table 9 *Transmission parameters of the serial RS 232 interface*

6.3 Terminal Program

Every terminal program compatible with the transmission parameters shown above can be used, examples are HyperTerminal® or Tera Term®. HyperTerminal has been included in earlier versions of Microsoft® Windows®. Additionally it can be downloaded from the following address:

Link

https://www.hilgraeve.com/hyperterminal/

Start the terminal program on the PC and connect the COM port with the pins TxD, RxD und GND of the magnet sensor. When the connection is established successfully the main menu as shown in section 6.4 appears. Sometimes it is necessary to refresh the menu with the key Esc.

6.4 Service Program

```
HG19600          Serialnumber: 999999       Firmwareversion: V0.41

  system monitor
          __                      __
         |  |                    |  |
       ---------------------------------
      |   HG 19600         O O X O X    |
      |                                 |
       ---------------------------------
                                X

    number of tracks detected: 1                 next turn: STRAIGHT
    position track:   7.500
                                                 (L) left
    output:       7.50                           (R) right
                                                 (S) straight
    error:     0x00                              (D) digital input

    (1) CSV Output
    (2) settings
    (3) testmode
    (4) raw data

                     Status: DIN:00  DOUT:0 AOUT1(X):   7.5V AOUT2(Z):  7.6V
```

Figure 13 *Main menu*

The service program shows the current system status. In its first line the serial number and the software version are output. Below a visual representation of the sensor casing follows that shows the position of detected magnetic tapes,

Status display	
number of tracks detected	number of detected tracks (0, 1 oder 2)
position track	position of the chosen track
next turn	selected turnoff direction, for testing purposes this can be manually overwritten with L, R and S, reset with D afterwards (also see following page)
output	output position (equal to the value for *position track*, however a different value can be calculated if the default values for *Amplitude*, *Offset* and *Invert Track* have been changed, s. 6.4.2 on page 25)

Table 10 *Status displays in the main menu*

The status line lists the following information:

Status line	
DIN	state of the digital inputs (s. Table 8 on page 20)
DOUT	state of the digital output (detect)
AOUT1 (X)	state of the analog output
AOUT2 (Z)	state of the analog output

Table 11 *Status line in the main menu*

The keys 1, 2, 3 and 4 allow to switch to further menus. With the keys L, R and S the digital inputs for the turnoff selection can be overwritten for testing purposes:

– L chooses the left track) / R chooses the right track.

– S chooses straight-ahead driving (center).

When the digital inputs are overwritten the message `!digital inputs overwritten!` appears. D resets the overwriting.

6.4.1 (1) CSV Output

```
HG 19600          Serialnumber: 0            Firmwareversion: V0.41

CSV Output

(1) continuous output (5Hz)
(2) single line per keypress (spacebar -> next line)



   start text capture before countinuing



(ESC) QUIT
```

Figure 14 *Menu CSV Output*

For the purpose of diagnosing the sensor several values are output in the CSV format (Comma Separated Values). This output can be stored on the PC by using a terminal program (e.g. HyperTerminal®, menu transmission, record/save text). Set the file extension of the file to be written to *.csv* and start saving before you start the output in the service program. You have two output options:

– 1 (default): The values are output as a continuous stream.

– 2: A new line is output whenever the space bar is pressed in the PC.

In order to end the recording end the transmission in the terminal program, then stop the output stream in the service program with the key Esc. The text file on the PC has the following format:

```
Counter;System1_X;System1_Y;System1_Z;System2_X;System2_Y;System2_Z;System3_X;System3_Y;System3_Z;
total_field;PositionTrack1;OutputPosition;AOUT1;AOUT2;DOUT;DIN1;DIN2;NumberofTracks;SYSTEMER-
ROR;SN: 0; SW: V0.40
1; -0.244; -0.001;  0.079;  0.031;  0.008;  0.278;  0.181; -0.021;  0.025;  0.720;  0.514;  0.514;
0.513;  5.564;1;0;0;1;0
2; -0.244; -0.001;  0.079;  0.031;  0.008;  0.278;  0.180; -0.021;  0.025;  0.720;  0.511;  0.511;
0.514;  5.568;1;0;0;1;0
3; -0.243; -0.001;  0.079;  0.031;  0.008;  0.278;  0.180; -0.021;  0.025;  0.720;  0.512;  0.512;
0.512;  5.568;1;0;0;1;0
4; -0.244; -0.001;  0.079;  0.031;  0.008;  0.278;  0.181; -0.021;  0.025;  0.720;  0.512;  0.512;
0.511;  5.568;1;0;0;1;0
5; -0.244; -0.001;  0.079;  0.031;  0.008;  0.278;  0.180; -0.021;  0.025;  0.720;  0.512;  0.512;
0.514;  5.568;1;0;0;1;0
6; -0.244; -0.001;  0.079;  0.031;  0.008;  0.278;  0.180; -0.021;  0.025;  0.720;  0.512;  0.512;
0.512;  5.568;1;0;0;1;0
7; -0.244; -0.001;  0.079;  0.031;  0.008;  0.278;  0.180; -0.021;  0.025;  0.720;  0.514;  0.514;
0.510;  5.568;1;0;0;1;0
8; -0.244; -0.001;  0.079;  0.032;  0.008;  0.279;  0.181; -0.021;  0.025;  0.720;  0.514;  0.514;
0.516;  5.564;1;0;0;1;0
9; -0.243; -0.001;  0.079;  0.031;  0.008;  0.278;  0.181; -0.021;  0.025;  0.720;  0.515;  0.515;
0.513;  5.564;1;0;0;1;0
10; -0.244; -0.001;  0.079;  0.031;  0.008;  0.279;  0.181; -0.021;  0.025;  0.721;  0.510;  0.510;
0.510;  5.573;1;0;0;1;0
11; -0.244; -0.001;  0.079;  0.031;  0.008;  0.278;  0.181; -0.021;  0.025;  0.720;  0.513;  0.513;
0.511;  5.568;1;0;0;1;0
(...)
```

Figure 15 *Example of a CSV text recording*

Afterwards the file can be imported into a spreadsheet program (e.g. Microsoft® Excel®) and analyzed.

	A	B	C	D	E	F	G	H	I	J	K	L	M	N	O	P	Q	R	S	T	U	V
1	Counter	System1_X	System1_Y	System1_Z	System2_X	System2_Y	System2_Z	System3_X	System3_Y	System3_Z	total_field	PositionTrack1	OutputPosition	AOUT1	AOUT2	DOUT	DIN1	DIN2	NumberofTracks	SYSTEMERROR	SN: 0	SW: V0.40
2	1	-0.244	-0.001	0.079	0.031	0.008	0.278	0.181	-0.021	0.025	0.720	0.514	0.514	0.513	5.564	1	0	0	1	0		
3	2	-0.244	-0.001	0.079	0.031	0.008	0.278	0.180	-0.021	0.025	0.720	0.511	0.511	0.514	5.568	1	0	0	1	0		
4	3	-0.243	-0.001	0.079	0.031	0.008	0.278	0.180	-0.021	0.025	0.720	0.512	0.512	0.512	5.568	1	0	0	1	0		
5	4	-0.244	-0.001	0.079	0.031	0.008	0.278	0.181	-0.021	0.025	0.720	0.512	0.512	0.511	5.568	1	0	0	1	0		
6	5	-0.244	-0.001	0.079	0.031	0.008	0.278	0.180	-0.021	0.025	0.720	0.512	0.512	0.514	5.568	1	0	0	1	0		
7	6	-0.244	-0.001	0.079	0.031	0.008	0.278	0.180	-0.021	0.025	0.720	0.512	0.512	0.512	5.568	1	0	0	1	0		
8	7	-0.244	-0.001	0.079	0.031	0.008	0.278	0.180	-0.021	0.025	0.720	0.514	0.514	0.510	5.568	1	0	0	1	0		
9	8	-0.244	-0.001	0.079	0.032	0.008	0.279	0.181	-0.021	0.025	0.720	0.514	0.514	0.516	5.564	1	0	0	1	0		
10	9	-0.243	-0.001	0.079	0.031	0.008	0.278	0.181	-0.021	0.025	0.720	0.515	0.515	0.513	5.564	1	0	0	1	0		
11	10	-0.244	-0.001	0.079	0.031	0.008	0.279	0.181	-0.021	0.025	0.721	0.510	0.510	0.510	5.573	1	0	0	1	0		
12	11	-0.244	-0.001	0.079	0.031	0.008	0.278	0.181	-0.021	0.025	0.720	0.513	0.513	0.511	5.568	1	0	0	1	0		

Figure 16 *CSV recording imported into a spreadsheet program*

6.4.2 (2) Settings

By using the key 2 in the main menu the settings menu of the magnet sensor is opened.

```
HG19600          Serialnumber: 999999       Firmwareversion: V0.41

  settings
                                          Range:
     (1) track polarity : north

     (2) sensitivity    :  0.200 [mT]  0.05 .. 2
     (3) sen. two tracks:  0.800        0.1 .. 4

         AOUT1 (X)
     (4) amplitude      :  10.00 [V]    2.5 .. (10 - offset)
     (5) offset         :   0.00 [V]      0 .. (10 - amplitude)
     (6) invert output  : NO

         AOUT2 (Z)
     (7) amplitude      :  10.00 [V]      0 .. 10



     (D) load default settings
     (F) firmware update
    (ESC) QUIT
                    Status: DIN:00  DOUT:0 AOUT1(X):   0.0V AOUT2(Z):  0.0V
```

Figure 17 *Menu settings*

Note

Changed parameters are automatically saved

- 1 changes the polarity of the magnetic tape (`south` = magnetic south pole on the top; `north` = magnetic north pole on the top, default; s. section 3.1 on page 11)
- 2 threshold for the detection of a single magnetic tape
- 3 threshold for the detection of two magnetic tapes
- 4 maximum amplitude of the output voltage AOUT1
- 5 offset of the output voltage AOUT1
- 6 invert output voltage AOUT1 (if the sensor has to be mounted side-inverted)
- 7 maximum amplitude of the output voltage AOUT2
- D reset parameters to factory settings
- F software update (see section 6.4.5 on page 27)

6.4.3 (3) test monitor

The test menu can be used to check the analog and digital outputs:

```
HG19600          Serialnumber: 999999       Firmwareversion: V0.41

test monitor

 (1) toggle digital output (detect)

 (2) Set AOUT1 (X) =   0V
 (3) Set AOUT1 (X) =  10V
 (4) Set AOUT1 (X) = -10V
 (5) Set AOUT1 (X) =   xV   [-10V .. 10V]

 (6) Set AOUT2 (Z) =   0V
 (7) Set AOUT2 (Z) =  10V
 (8) Set AOUT2 (Z) =   xV   [0V .. 10V]









 (ESC) QUIT
                 Status: DIN:00  DOUT:0 AOUT1(X):   0.0V AOUT2(Z):  0.0V
```

Figure 18 *Menu test monitor*

- 1 switches the digital output DOUT on/off.
- 2 sets the output voltage AOUT 1 (X) to 0V.
- 3 sets the output voltage AOUT 1 (X) to 10V.
- 4 sets the output voltage AOUT 1 (X) to -10V.
- 5 sets the output voltage AOUT 1 (X) to a self-chosen value between -10 and 10 V.
- 6 sets the output voltage AOUT 2 (Z) to 0V.
- 7 sets the output voltage AOUT 2 (Z) to 10V.
- 8 sets the output voltage AOUT 2 (Z) to a self-chosen value between 0 and 10 V.

6.4.4 (4) RAW data monitor

In this menu raw data of the sub systems is shown. Additionally the value `sum of flux density` is shown. This is needed for the commissioning.

Note

The magnet sensor determines a position with X, Y and Z coordinates. For the track guidance only X and Z are used and output. In the RAW data monitor the internal value for Y is also shown.

```
  HG 19600       Serialnumber: 999999      Firmwareversion: V0.41   120 Hz

   RAW data monitor
           __                        __
          |  |                      |  |
        ---------------------------------
       |   HG 19600         O O O O X    |
       |                                 |
        ---------------------------------


        system 3            system 2            system 1

    X    -0.015 [mT]          0.011 [mT]          0.028 [mT]
    Y    -0.068 [mT]         -0.041 [mT]         -0.060 [mT]
    Z     0.067 [mT]          0.066 [mT]          0.040 [mT]
 track   No                  No                  No
detect

 sum of flux density:  0.231


     (ESC) QUIT
                    Status: DIN:00  DOUT:0 AOUT1(X):   0.0V AOUT2(Z):  0.0V
```

Figure 19 *Menu RAW data monitor*

6.4.5 Software Update (Firmware)

Directly after switching the supply voltage on the following message appears in the terminal program.

```
+------------------------------------------------------------------+
|                                                                  |
|  HG 19600 Bootloader V1.1                                        |
|                                                                  |
+------------------------------------------------------------------+

                                      Serialnumber: 999999


Press F to Upload new Firmware..................
```

Figure 20 *Menu software update*

In order to start a software update press the key F within 5 seconds.

```
+-------------------------------------------------------------------+
|                                                                   |
|  HG 19600 Bootloader V1.1                                         |
|                                                                   |
+-------------------------------------------------------------------+

                                        Serialnumber: 999999


Press F to Upload new Firmware.....
Waiting for the file to be sent (YModem)... (press 'a' to abort)
```

Figure 21 *Transfer of a firmware update*

At this point the transfer can be started, the protocol has to be *Y-Modem*. If the transmission is successful the following message appears. Press any key to quit, afterwards the sensor switches to normal operation mode.

```
+-------------------------------------------------------------------+
|                                                                   |
|  HG 19600 Bootloader V1.1                                         |
|                                                                   |
+-------------------------------------------------------------------+

                                        Serialnumber: 999999


Press F to Upload new Firmware.............
Waiting for the file to be sent (YModem)... (press 'a' to abort)
C

 Programming Completed Successfully!
--------------------------------
 Name: HG19600_user.bin
 Size: 30664 Bytes
--------------------


Press any key...
```

Figure 22 *Finishing a software update*

7 Maintenance

The device is mostly maintenance-free. The maintenance is limited to

– a visual inspection of the sensor (all screws sit tight, cables and connectors are attached correctly).

If necessary update the firmware as shown in section 6.4.5 on page 27). Date and version of the firmware are shown in the main menu (Figure 13 on page 22).

8 Technical Data

Technical Data Magnet Sensor	
Nominal reading height	60 mm when using the magnetic tape HW MAT00003, see Table 1 on page 11. For different magnetic tape a different reading height might be needed.
Casing dimensions	156 x 31 x 53 mm (W x D x H)
Casing material	Polycarbonate
Weight	150 g
Protection class	IP 54
Relative humidity at 25° C	95% (without condensation)
Operating temperature range	-20° C to +50° C
Storage temperature range	-20° C to +70° C
Supply voltage	+ 24VDC
Current consumption	< 100 mA
Connector	2 Stecker M12 (1x 5 pol. / 1x 8 pol.)
Analog outputs	– AOUT 1 (X): -10 to +10 VDC – AOUT 2 (Z): 0-10 VDC
Digital output	Detect: +24 VDC (+Ub), max. 20 mA
Serial interface	RS232

Table 12 *Technical Data*

9 List of Figures

10 List of Tables

11 Copyright and Terms of Liability

11.1 Copyright

11.2 Trade Marks and Company Names

Unless stated otherwise, the herein mentioned logos and product names are legally protected trade marks of Götting KG. All third party product or company names may be trade marks or registered trade marks of the corresponding companies.

Innovation through Guidance

Götting KG
Celler Str. 5 | D-31275 Lehrte
Tel. +49 (0) 5136 / 8096 -0
Fax +49(0) 5136 / 8096 -80
info@goetting-agv.com | www.goetting-agv.com